www.ct-micro.com

4N29, 4N30, 4N31, 4N32, 4N33
H11B1, H11B2, H11B3, H11B255, TIL113
DC Input 6-Pin DMC-Isolator®
Photodarlington Optocoupler

Features

- High isolation 5000 VRMS
- Patented coplanar structure DMC-Isolator®
- DC input with Transistor output
- Operating Temperature range - 55 °C to 100 °C
- External Creepage ≥ 7.4mm
- Distance Through Isolation ≥ 0.4mm
- Clearance Distance ≥ 7.5mm (S/SL Type)
- Clearance Distance ≥ 8.0mm (M Type)
- RoHS and REACH Compliance
- Halogen Free Compliance (Optional)
- MSL class 1
- Regulatory Approvals
  - ✓ UL - UL1577 (E364000)
  - ✓ VDE - EN60747-5-5(VDE0884-5)
  - ✓ CQC – GB4943.1, GB8898 (14001105802)
  - ✓ IEC62368 (FI/41119)

Description

The 4N29, 4N30, 4N31, 4N32, 4N33, H11B1, H11B2, H11B3, H11B255, and TIL113 series consist of a photodarlington transistor optically coupled to an Infrared-emitting diode in a 6-lead DIP DMC-Isolator® package with different lead forming options.

Applications

- Switch mode power supplies
- Computer peripheral interface
- Microprocessor system interface

Package Outline

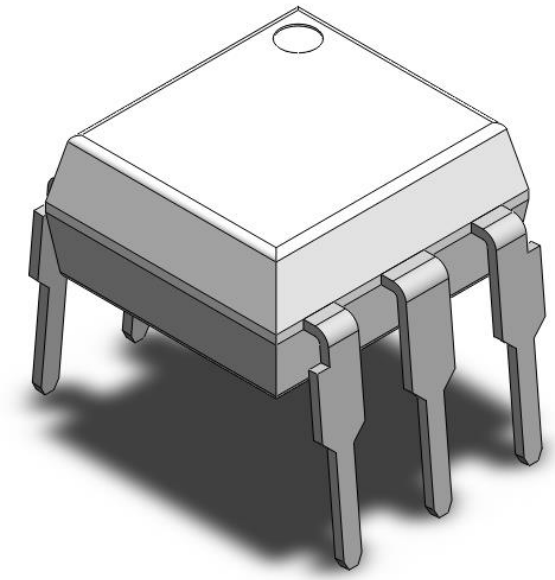

Schematic

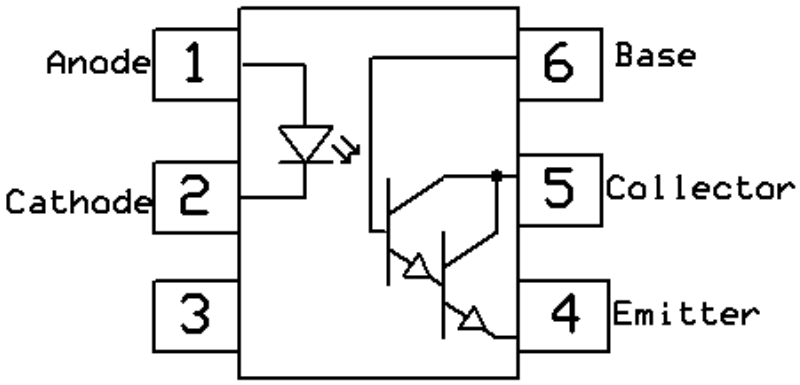

Note: Different bending options available. See package dimension.

© 2022 CT MICRO INTERNATIONAL CORPORATION
ALL RIGHTS RESERVED.

Absolute Maximum Ratings *T_A = 25°C, unless otherwise specified*

Stresses in excess of the absolute maximum ratings can cause permanent damage to the device. Functional operation of the device is not implied at these or any other conditions in excess of those given in the operational sections of this document. In addition, extended exposure to stresses above the recommended operating conditions may affect device reliability. The absolute maximum ratings are stress ratings only.

Symbol	*Parameters*	*Ratings*	*Units*	*Notes*
V_{ISO}	Isolation voltage (AC, 1 minute, 40 ~ 60% R.H.)	5000	V_{RMS}	
T_{OPR}	Operating temperature	-55 ~ +100	^{0}C	
T_{STG}	Storage temperature	-55 ~ +150	^{0}C	
T_{SOL}	Soldering temperature (For 10 seconds)	260	^{0}C	
Emitter				
I_F	Forward current	60	mA	
$I_{F(TRANS)}$	Peak transient current (≤1μs P.W,300pps)	1	A	
V_R	Reverse voltage	6	V	
P_D	Power dissipation	120	mW	
Detector				
P_D	Power dissipation	150	mW	
B_{VCEO}	Collector-Emitter Breakdown Voltage	55	V	
B_{VCBO}	Collector-Base Breakdown Voltage	55	V	
B_{VECO}	Emitter-Collector Breakdown Voltage	7	V	
B_{VEBO}	Emitter-Base Breakdown Voltage	7	V	

© 2022 CT MICRO INTERNATIONAL CORPORATION
ALL RIGHTS RESERVED.

Electrical Characteristics *T_A = 25°C, unless otherwise specified*

Emitter Characteristics

Symbol	Parameters		Test Conditions	Min	Typ	Max	Units	Notes
V_F	Forward voltage	4N29	I_F=10mA	-	1.24	1.4	V	
		4N30						
		4N31						
		4N32						
		4N33						
		H11B1						
		H11B2						
		H11B3						
		H11B255						
		TIL113						
		H11B3	I_F=50mA	-	1.45	1.5	V	
I_R	Reverse Current		V_R = 6V	-	-	5	µA	
C_{IN}	Input Capacitance		f= 1MHz	-	45	-	pF	

Detector Characteristics

Symbol	Parameters	Test Conditions	Min	Typ	Max	Units	Notes
B_{VCEO}	Collector-Emitter Breakdown	I_C= 100µA	55	-	-	V	
B_{VECO}	Emitter-Collector Breakdown	I_E= 100µA	7	-	-	V	
B_{VCBO}	Collector-Base Breakdown	I_C= 100µA	55	-	-	V	
I_{CEO}	Collector-Emitter Dark Current	V_{CE}= 10V, I_F=0mA	-	-	100	nA	

© 2022 CT MICRO INTERNATIONAL CORPORATION
ALL RIGHTS RESERVED.

Electrical Characteristics *T_A = 25°C, unless otherwise specified (Continued)*

Transfer Characteristics

Symbol	Parameters		Test Conditions	Min	Typ	Max	Units	Notes
CTR	Current Transfer Ratio	4N29, 4N30	I_F= 10mA, V_{CE}= 10V	100	-	-	%	
		4N31		50	-	-		
		4N32, 4N33		500	-	-		
		H11B1	I_F= 1mA, V_{CE}= 10V	500	-	-		
		H11B2		200	-	-		
		H11B3		100	-	-		
		H11B255	I_F= 10mA, V_{CE}= 5V	100	-	-		
		TIL113	I_F= 10mA, V_{CE}= 1V	300	-	-		
$V_{CE(SAT)}$	Collector-Emitter Saturation Voltage	4N29, 4N30, 4N32, 4N33	I_F= 8mA, I_C= 2mA	-	-	1.0	V	
		4N31, TIL113	I_F= 8mA, I_C= 2mA	-	-	1.2		
		H11B1, H11B2, H11B3	I_F= 1mA, I_C= 1mA	-	-	1.0		
		H11B255	I_F=50mA, I_C= 50mA	-	-	1.0		
R_{IO}	Isolation Resistance		V_{IO}= 500V_{DC}	$1x10^{11}$	-	-	Ω	
C_{IO}	Isolation Capacitance		f= 1Mhz	-	0.25	-	pF	

Switching Characteristics

Symbol	Parameters		Test Conditions	Min	Typ	Max	Units	Notes
T_{ON}	Turn On Time	4N29, 4N30, 4N31, 4N32, 4N33, TIL113	I_F= 200mA, I_c= 50mA, R_L= 100Ω	-	-	4.7	µs	
		H11B1, H11B2, H11B3, H11B255	I_F= 10mA, V_{CC}= 10V, R_L= 100Ω	-	24	-		
T_{OFF}	Turn Off Time	4N29, 4N30, 4N31	I_F= 200mA, I_c= 50mA, R_L= 100Ω	-	-	30	µs	
		4N32, 4N33, TIL113		-	-	90		
		H11B1, H11B2, H11B3, H11B255	I_F= 10mA, V_{CC}= 10V, R_L= 100Ω	-	17	-		

© 2022 CT MICRO INTERNATIONAL CORPORATION
ALL RIGHTS RESERVED.

Typical Characteristic Curves *T_A = 25°C, unless otherwise specified*

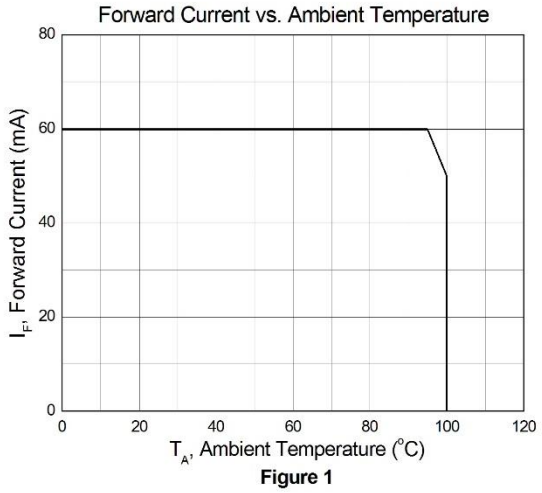

Figure 1

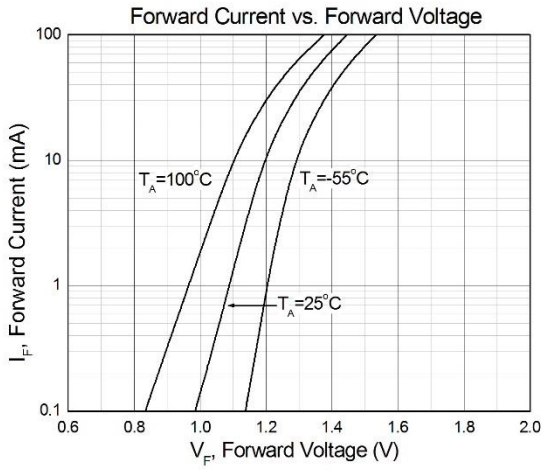

Figure 2

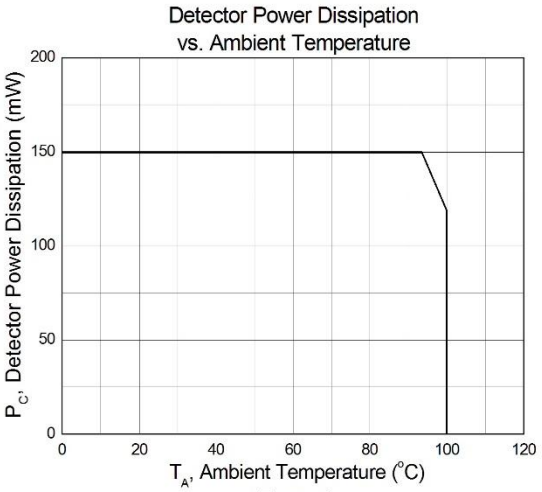

Figure 3

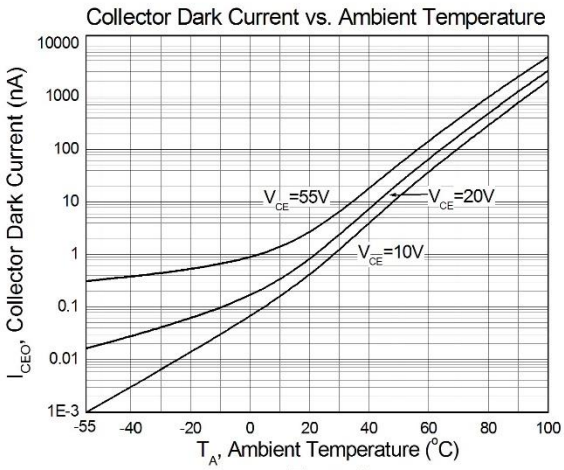

Figure 4

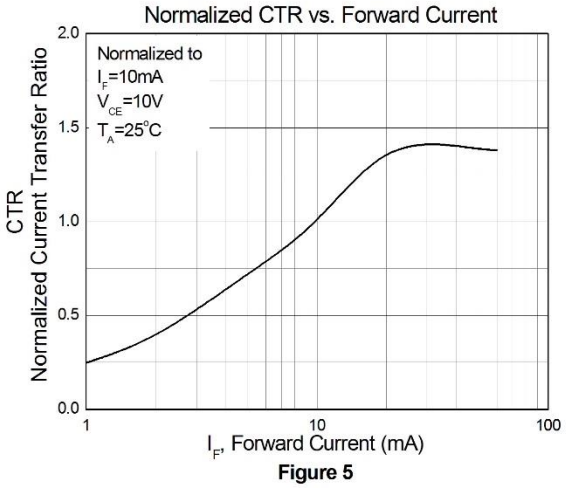

Figure 5

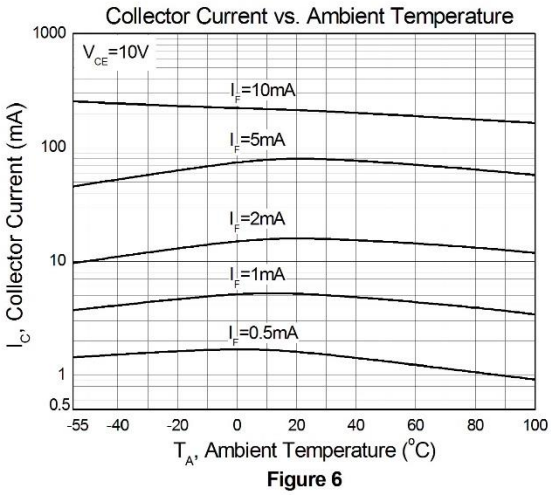

Figure 6

© 2022 CT MICRO INTERNATIONAL CORPORATION
ALL RIGHTS RESERVED.

Typical Characteristic Curves *T_A = 25°C, unless otherwise specified (Continued)*

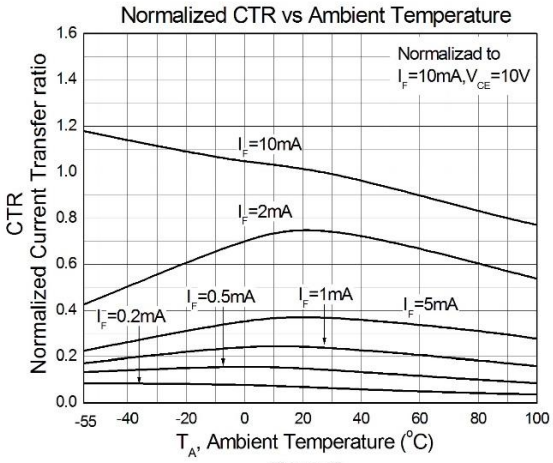

Figure 7

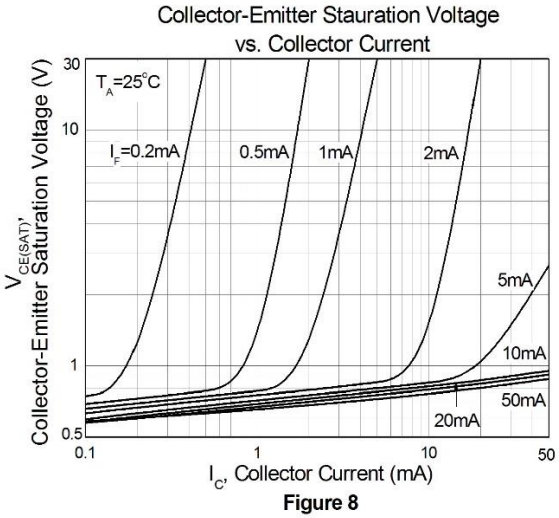

Figure 8

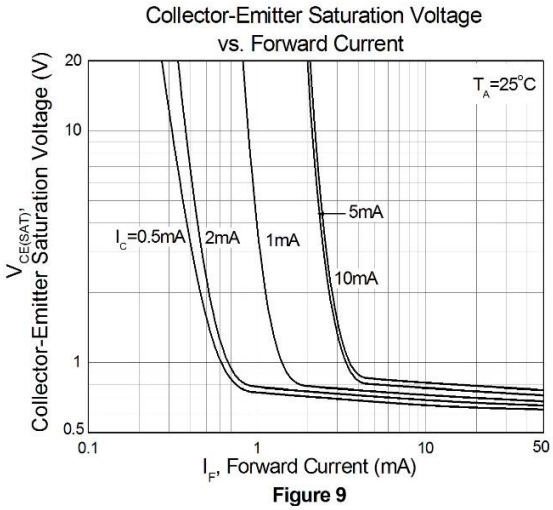

Figure 9

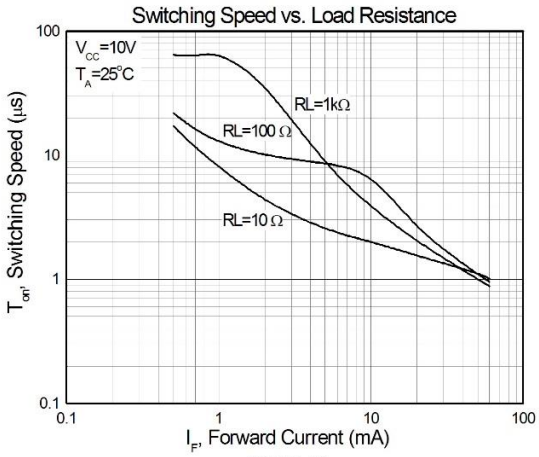

Figure 10

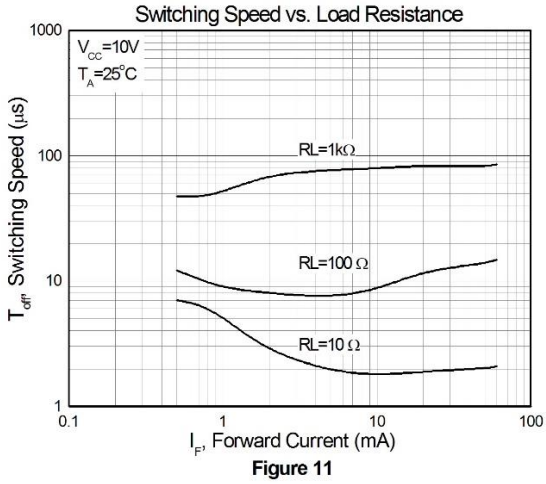

Figure 11

© 2022 CT MICRO INTERNATIONAL CORPORATION
ALL RIGHTS RESERVED.

Package Dimension *Dimensions in mm unless otherwise stated*

Standard DIP – Through Hole

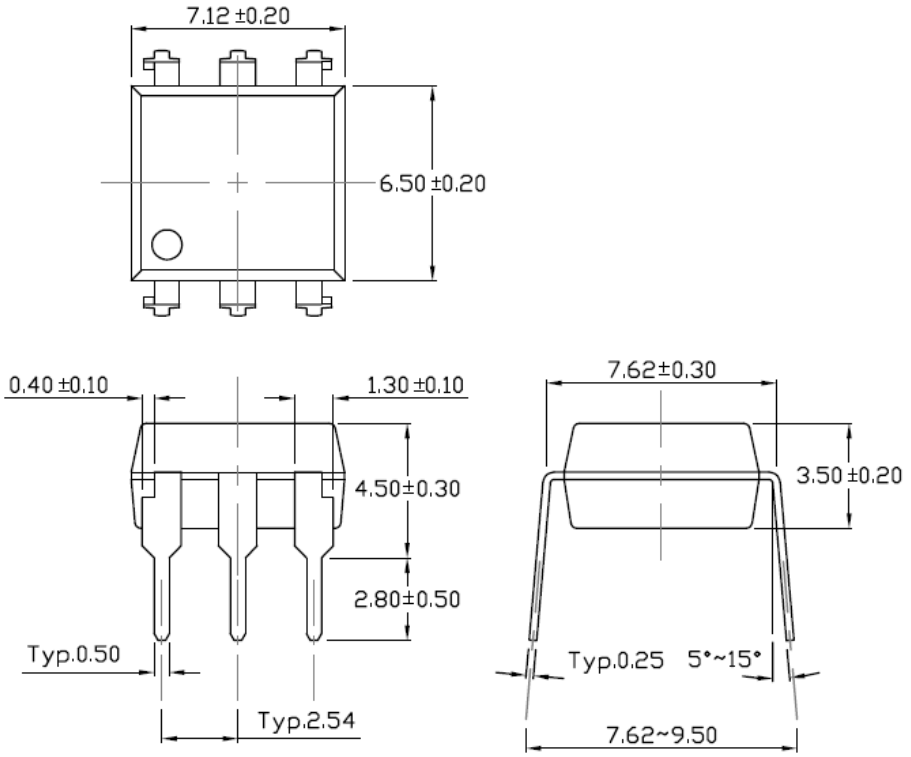

Forming Option

M Type

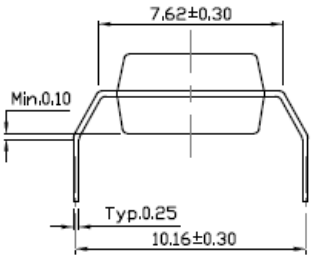

S Type

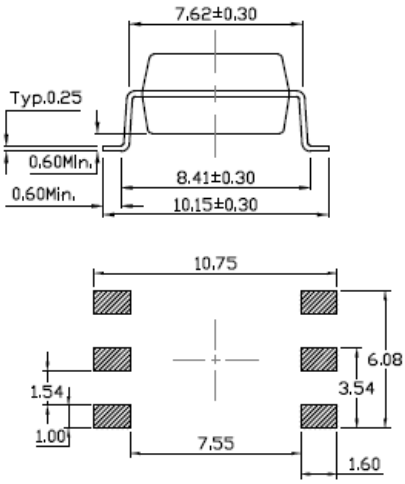

SL Type

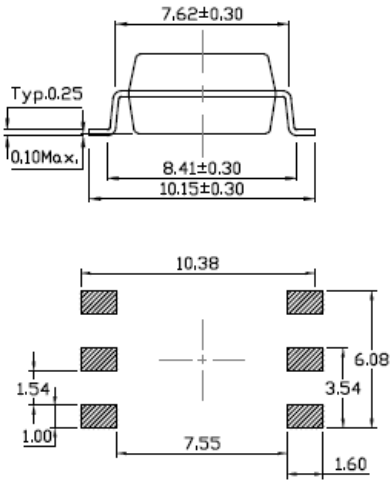

© 2022 CT MICRO INTERNATIONAL CORPORATION
ALL RIGHTS RESERVED.

Marking Information

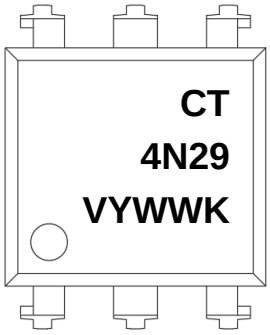

Note:

CT : Denotes “CT Micro”
4N29 : Part Number
V : VDE Safety Mark Option (Blank or V)
Y : One Digit Year Code
WW : Two Digit Work Week
K : Manufacturing Code

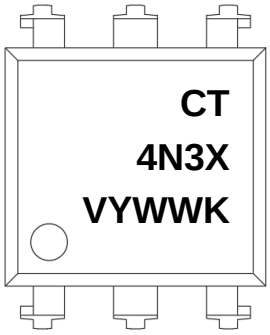

Note:

CT : Denotes “CT Micro”
4N3X : Part Number (X=0,1,2 or 3)
V : VDE Safety Mark Option (Blank or V)
Y : One Digit Year Code
WW : Two Digit Work Week
K : Manufacturing Code

Note:

CT : Denotes “CT Micro”
H11BX: Part Number (X=1, 2, 3 or 255)
V : VDE Safety Mark Option (Blank or V)
Y : One Digit Year Code
WW : Two Digit Work Week
K : Manufacturing Code

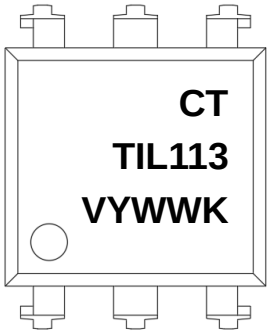

Note:

CT : Denotes “CT Micro”
TIL113: Part Number
V : VDE Safety Mark Option (Blank or V)
Y : One Digit Year Code
WW : Two Digit Work Week
K : Manufacturing Code

© 2022 CT MICRO INTERNATIONAL CORPORATION
ALL RIGHTS RESERVED.

Ordering Information

4N29(V)(Y)(Z)-G, 4N3X(V)(Y)(Z)-G

X = Part Number (0, 1, 2, 3 for 4N3X series)
V = VDE Safety Mark Option (Blank or V)
Y = Lead Form Option (Blank, M, S or SL)
Z = Tape and Reel Option (Blank, T1 or T2)
G = Material Option (G: Halogen Free, Blank: Non-Halogen Free)

H11BX(V)(Y)(Z)-G

X = Part Number (1, 2, 3, 255 for H11BX series)
V = VDE Safety Mark Option (Blank or V)
Y = Lead form Option (Blank, M, S or SL)
Z = Tape and Reel Option (Blank, T1 or T2)
G = Material Option (G: Halogen Free, Blank: Non-Halogen Free)

TIL113(V)(Y)(Z)-G

TIL113 = Part Number
V = VDE Safety Mark Option (Blank or V)
Y = Lead form Option (Blank, M, S or SL)
Z = Tape and Reel Option (Blank, T1 or T2)
G = Material Option (G: Halogen Free, Blank: Non-Halogen Free)

Option	***Description***	***Quantity***
None	Standard 6 Pin Dip	50Units/Tube
M	Wide Lead Forming	50Units/Tube
S(T1)	Surface Mount Lead Forming – With Option 1 Taping	1000 Units/Reel
S(T2)	Surface Mount Lead Forming – With Option 2 Taping	1000 Units/Reel
SL(T1)	Surface Mount Lead Forming (Low Profile) – With Option 1 Taping	1000 Units/Reel
SL(T2)	Surface Mount Lead Forming (Low Profile) – With Option 2 Taping	1000 Units/Reel

© 2022 CT MICRO INTERNATIONAL CORPORATION
ALL RIGHTS RESERVED.

Carrier Specifications *Dimensions in mm unless otherwise stated*

Tube Option Standard DIP

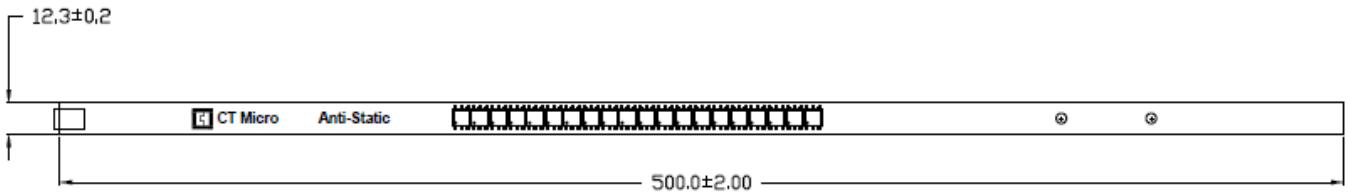

Tube Option M Type

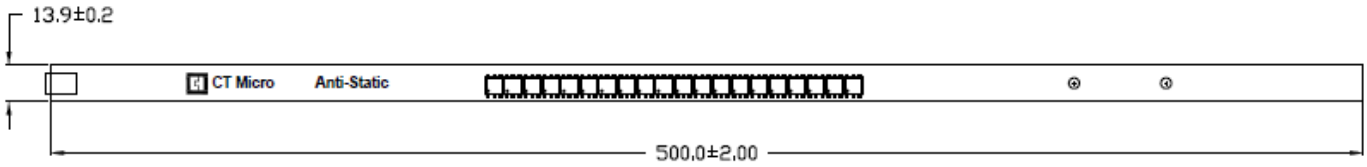

Reel Dimension *All dimensions are in mm, unless otherwise stated*

Option S(T1/T2) & SL(T1/T2)

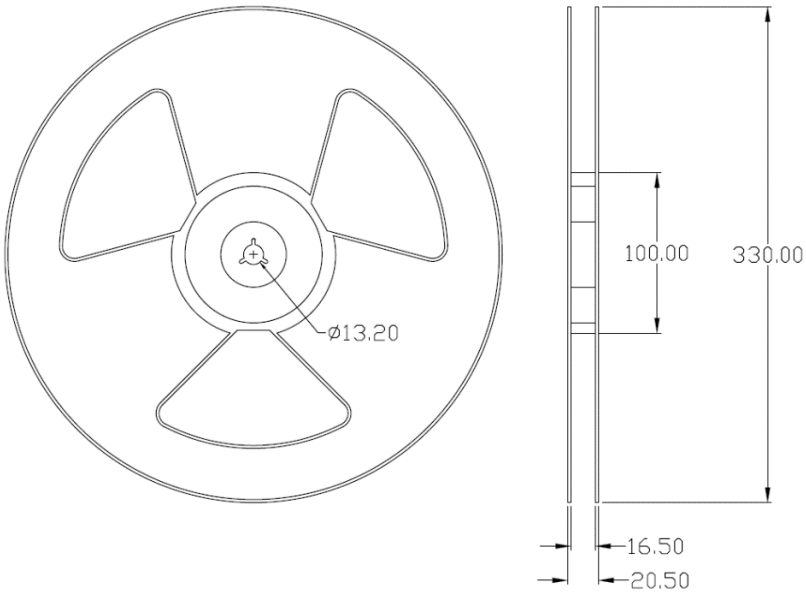

© 2022 CT MICRO INTERNATIONAL CORPORATION
ALL RIGHTS RESERVED.

Carrier Tape Specifications *Dimensions in mm unless otherwise stated*

Option S (T1) & SL (T1)

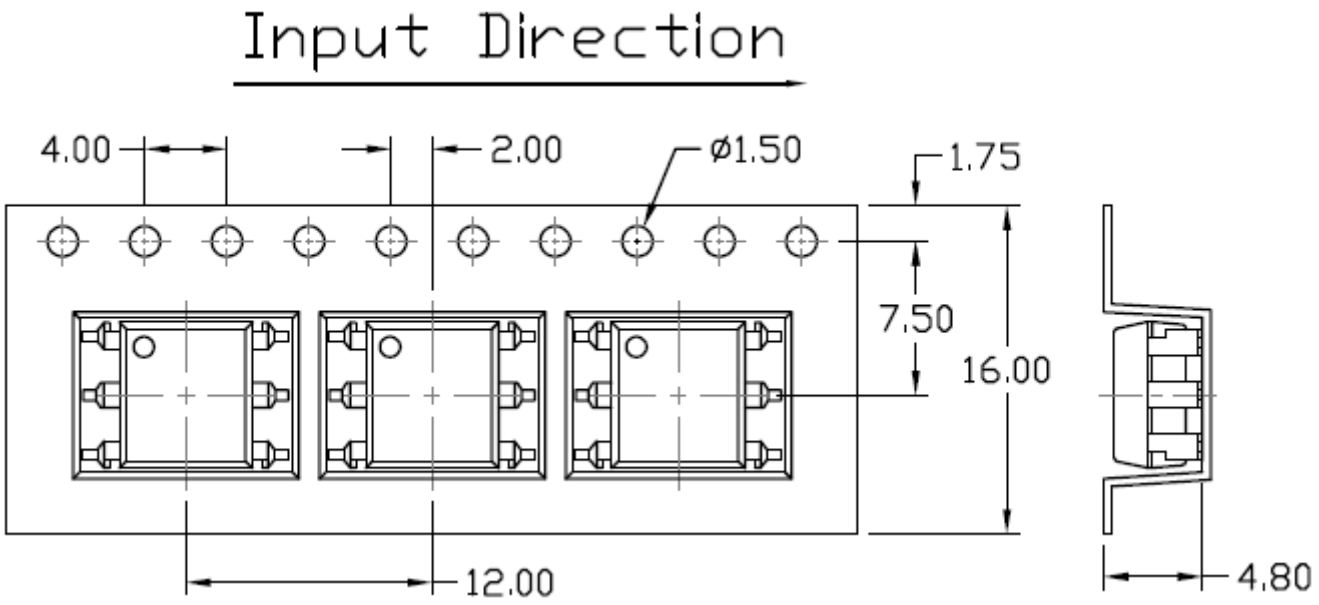

Option S (T2) & SL (T2)

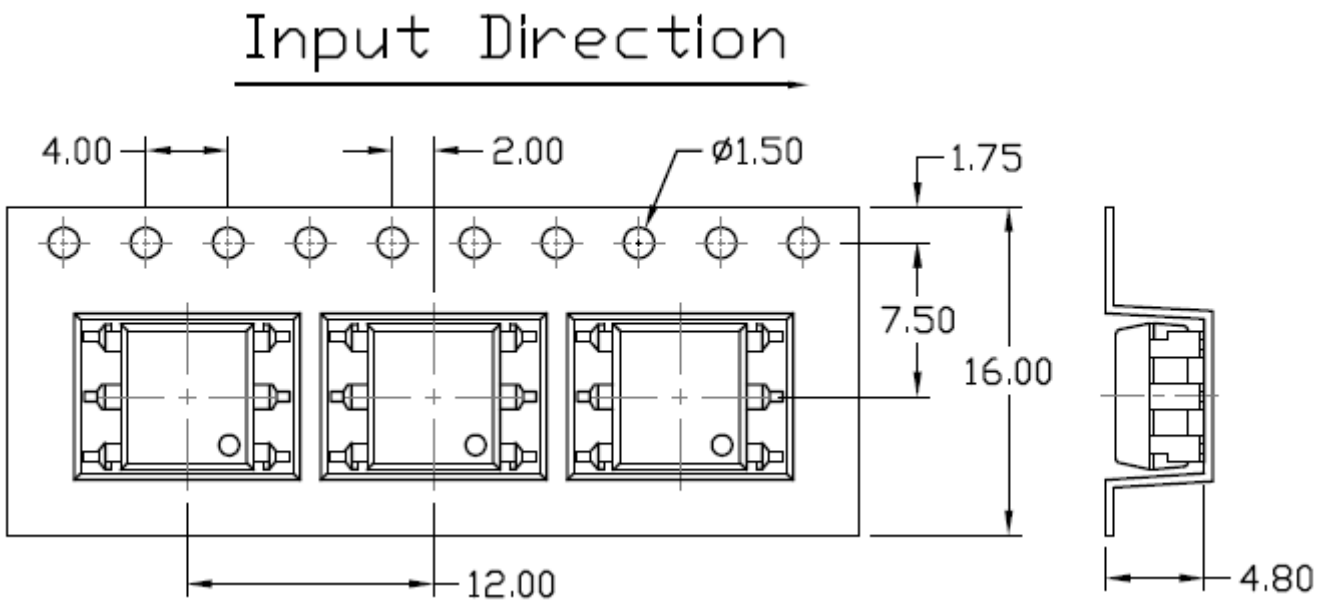

© 2022 CT MICRO INTERNATIONAL CORPORATION
ALL RIGHTS RESERVED.

Solderability spec (follow the JEDEC standard JESD22-B102)

Reflow Soldering: Immersed surface, other than the end of pin as cut-surface, must be covered by solder.
Solder-Bath: More than 95% of the electrode must be covered with solder.

Wave soldering (follow the JEDEC standard JESD22-A111)

One time soldering is recommended within the condition of temperature.
Temperature: 260+0/-5˚C.
Time: 10 sec.
Preheat temperature: 25 to 140˚C.
Preheat time: 30 to 80 sec.

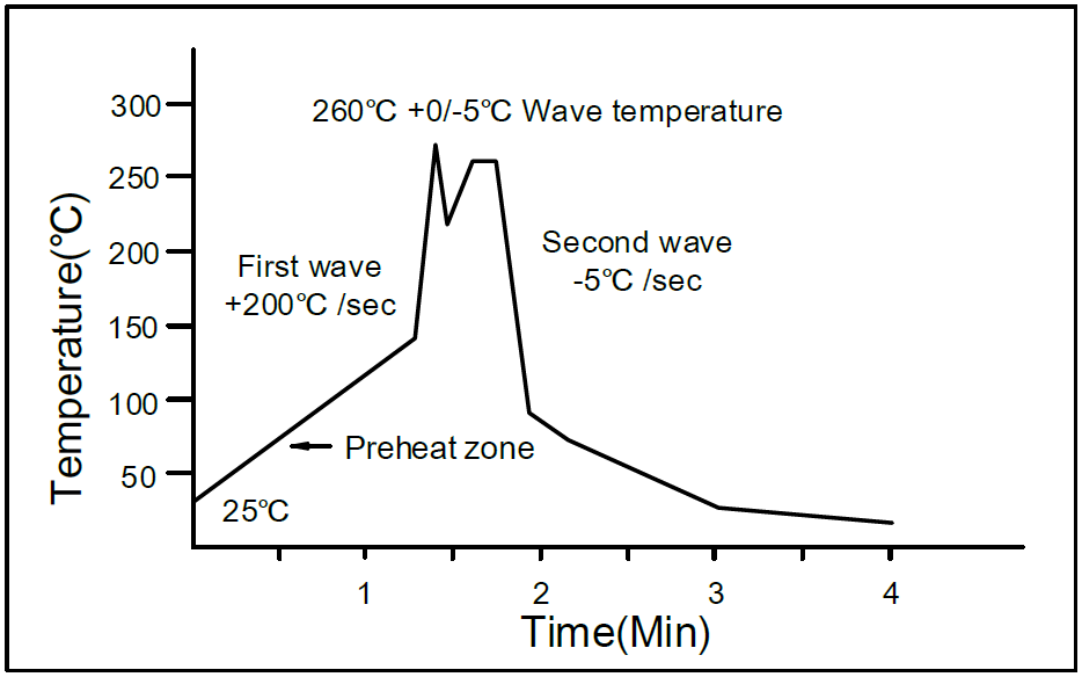

Iron Soldering (follow the standard MIL-STD 202G, Method 210F)

Allow single lead soldering in every single process.
One time soldering is recommended.
Temperature: 350±10˚C
Time: 5 sec max.

© 2022 CT MICRO INTERNATIONAL CORPORATION
ALL RIGHTS RESERVED.

Reflow Profile (follow the JEDEC standard J-STD-020)

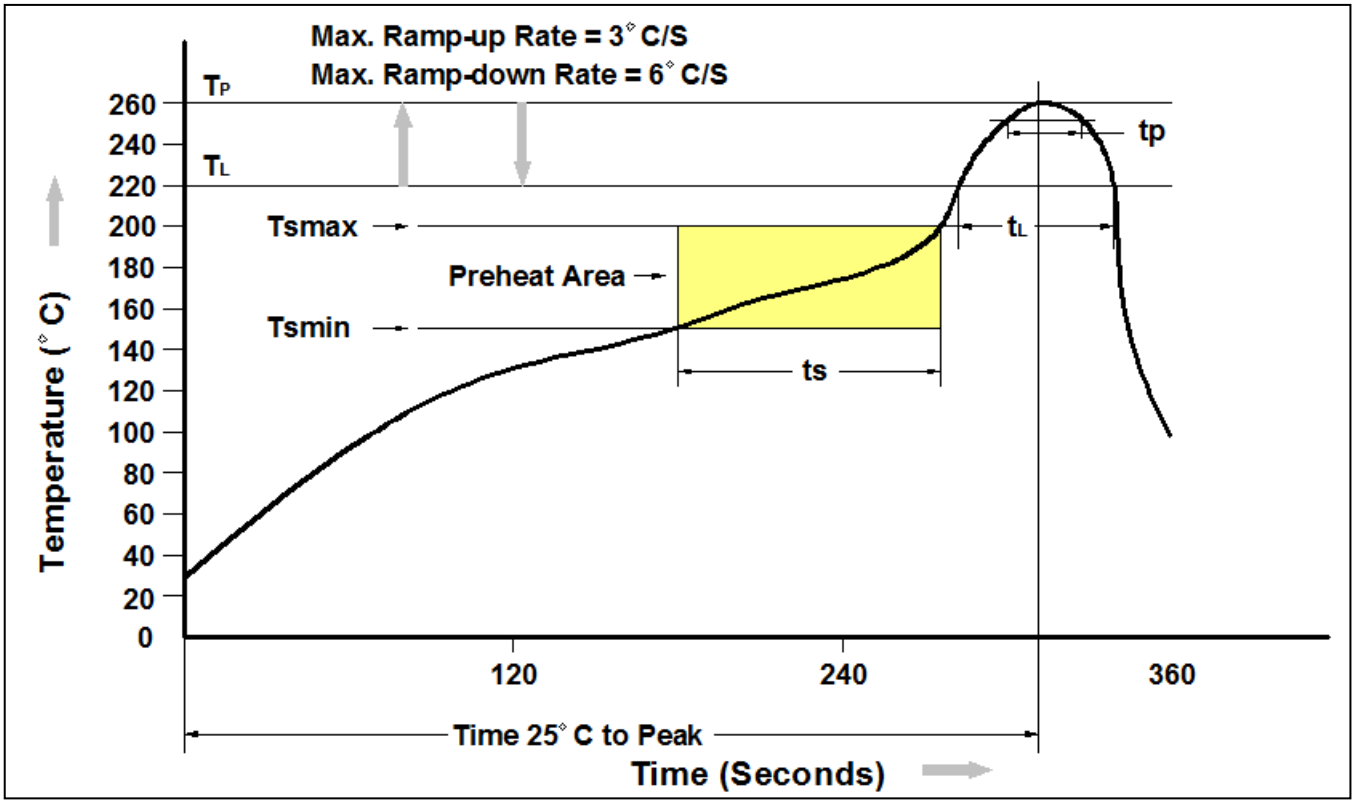

Profile Feature	Pb-Free Assembly Profile
Temperature Min. (Tsmin)	150°C
Temperature Max. (Tsmax)	200°C
Time (ts) from (Tsmin to Tsmax)	60-120 seconds
Ramp-up Rate (t_L to t_P)	3°C/second max.
Liquidous Temperature (T_L)	217°C
Time (t_L) Maintained Above (T_L)	60 – 150 seconds
Peak Body Package Temperature	260°C +0°C / -5°C
Time (t_P) within 5°C of 260°C	30 seconds
Ramp-down Rate (T_P to T_L)	6°C/second max
Time 25°C to Peak Temperature	8 minutes max.

© 2022 CT MICRO INTERNATIONAL CORPORATION
ALL RIGHTS RESERVED.

DISCLAIMER

DMC-Isolator® IS A TRADEMARK OF CT MICRO INTERNATIONAL CORPORATION AND/OR ITS SUBSIDIARIES. CT MICRO OWNS THE RIGHTS TO A NUMBER OF PATENTS, TRADEMARKS, COPYRIGHTS AND OTHER INTELLECTUAL PROPERTY.

CT MICRO RESERVES THE RIGHT TO MAKE CHANGES WITHOUT FURTHER NOTICE TO ANY PRODUCTS HEREIN TO IMPROVE RELIABILITY, FUNCTION OR DESIGN. CT MICRO DOES NOT ASSUME ANY LIABILITY ARISING OUT OF THE APPLICATION OR USE OF ANY PRODUCT OR CIRCUIT DESCRIBED HEREIN; NEITHER DOES IT CONVEY ANY LICENSE UNDER ITS PATENT RIGHTS, NOR THE RIGHTS OF OTHERS.

DISCOLORATION MIGHT OCCUR ON THE PACKAGE SURFACE AFTER SOLDERING, REFLOW OR LONG TERM USE. THIS DOES NOT IMPACT THE PRODUCT PERFORMANCE NOR THE PRODUCT RELIABILITY.

CT MICRO ARE NOT AUTHORIZED FOR USE AS CRITICAL COMPONENTS IN LIFE SUPPORT DEVICES OR SYSTEMS WITHOUT EXPRESS WRITTEN APPROVAL OF CT MICRO INTERNATIONAL CORPORATION.

1. *Life support devices or systems are devices or systems which, (a) are intended for surgical implant into the body, or (b) support or sustain life, or (c) whose failure to perform when properly used in accordance with instruction for use provided in the labelling, can be reasonably expected to result in significant injury to the user.*
2. *A critical component is any component of a life support device or system whose failure to perform can be reasonably expected to cause the failure of the life support device or system, or to affect its safety or effectiveness.*

© 2022 CT MICRO INTERNATIONAL CORPORATION
ALL RIGHTS RESERVED.