CT1010-W, CT1011-W, CT1012-W, CT1013-W, CT1014-W CT1015-W, CT1016-W, CT1017-W, CT1018-W, CT1019-W

DC Input 4-Pin LSOP DMC-Isolator®Phototransistor Optocoupler

www.ct-micro.com

Features

- High isolation 5000 VRMS
- Patented coplanar structure DMC-Isolator®
- DC input with transistor output
- Operating Temperature range - 55 °C to 125 °C
- External creepage distance > 8.0 mm
- Clearance distance >8.4mm
- Distances through insulation > 0.4 mm
- RoHS and REACH Compliance
- Halogen Free Compliance
- MSL class 1
- Regulatory Approvals
  - ✓ UL - UL1577 (E364000)
  - ✓ VDE - EN60747-5-5 (VDE0884-5)
  - ✓ CQC - GB4943.1, GB8898 (19001231775)
  - ✓ IEC62368 (FI/41119)

Description

The CT1010-W, CT1011-W, CT1012-W, CT1013-W, CT1014-W, CT1015-W, CT1016-W, CT1017-W, CT1018-W, CT1019-W consists of a photo transistor optically coupled to an Infrared-emitting diode in a 4-lead LSOP DMC-Isolator® Package.

Applications

- Switch mode power supplies
- Computer peripheral interface
- Microprocessor system interface

Package Outline

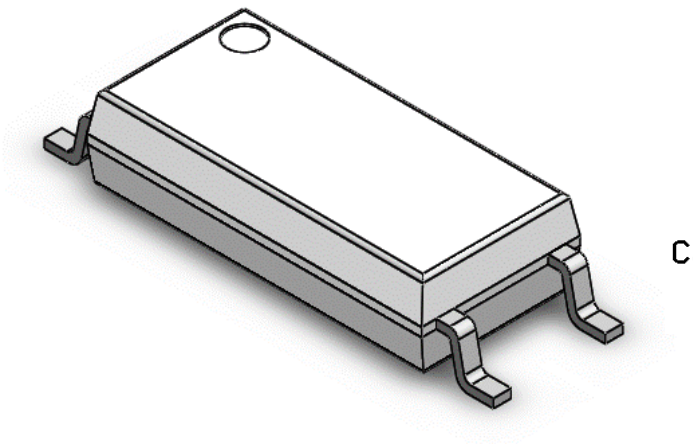

Schematic

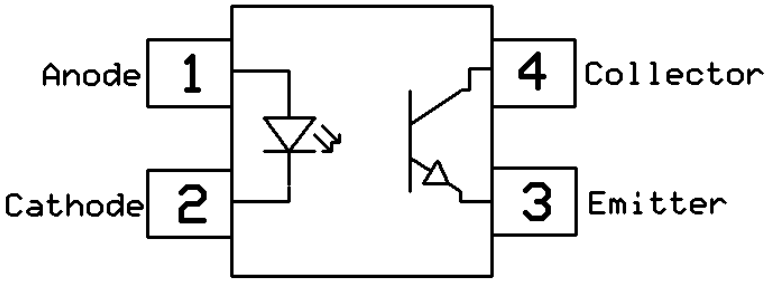

© 2022 CT MICRO INTERNATIONAL CORPORATION
ALL RIGHTS RESERVED.

Absolute Maximum Ratings *T_A = 25°C, unless otherwise specified*

Stresses in excess of the absolute maximum ratings can cause permanent damage to the device. Functional operation of the device is not implied at these or any other conditions in excess of those given in the operational sections of this document. In addition, extended exposure to stresses above the recommended operating conditions may affect device reliability. The absolute maximum ratings are stress ratings only.

Symbol	*Parameters*	*Ratings*	*Units*	*Notes*
V_{ISO}	Isolation voltage (AC, 1 minute, 40 ~ 60% R.H.)	5000	V_{RMS}	
T_{OPR}	Operating temperature	-55 ~ +125	°C	
T_{STG}	Storage temperature	-55 ~ +150	°C	
T_{SOL}	Soldering temperature (For 10 seconds)	260	°C	
T_J	Junction temperature	125	°C	
Emitter				
I_F	Forward current	50	mA	
$I_{F(TRANS)}$	Peak transient current (≤1μs P.W,300pps)	1	A	
V_R	Reverse voltage	6	V	
P_D	Power dissipation	85	mW	
Detector				
P_C	Power dissipation	150	mW	
B_{VCEO}	Collector-Emitter Breakdown Voltage	80	V	
B_{VECO}	Emitter-Collector Breakdown Voltage	7	V	
I_C	Collector Current	50	mA	

© 2022 CT MICRO INTERNATIONAL CORPORATION
ALL RIGHTS RESERVED.

Electrical Characteristics *T_A = 25°C, unless otherwise specified*

Emitter Characteristics

Symbol	*Parameters*	*Test Conditions*	*Min*	*Typ*	*Max*	*Units*	*Notes*
V_F	Forward voltage	I_F=10mA	-	1.26	1.4	V	
		I_F=50mA	-	1.42	1.5	V	
I_R	Reverse Current	V_R = 6V	-	-	5	µA	
C_{IN}	Input Capacitance	f= 1kHz	-	45	-	pF	

Detector Characteristics

Symbol	*Parameters*	*Test Conditions*	*Min*	*Typ*	*Max*	*Units*	*Notes*
B_{VCEO}	Collector-Emitter Breakdown	I_C= 100µA	80	-	-	V	
B_{VECO}	Emitter-Collector Breakdown	I_E= 100µA	7	-	-	V	
I_{CEO}	Collector-Emitter Dark Current	V_{CE}= 20V, I_F= 0mA	-	-	100	nA	

© 2022 CT MICRO INTERNATIONAL CORPORATION
ALL RIGHTS RESERVED.

Electrical Characteristics *T_A = 25°C, unless otherwise specified*

Transfer Characteristics

Symbol	*Parameters*		*Test Conditions*	*Min*	*Typ*	*Max*	*Units*	*Notes*
CTR	Current Transfer Ratio	CT1012-W	I_F= 1mA, V_{CE}= 5V	22	-	-	%	
		CT1013-W		34	-	-		
		CT1014-W		56	-	-		
		CT1011-W	I_F= 10mA, V_{CE}= 5V	60	-	300		
		CT1012-W		63	-	125		
		CT1013-W		100	-	200		
		CT1014-W		160	-	320		
		CT1010-W	I_F= 5mA, V_{CE}= 5V	50	-	600		
		CT1015-W		50	-	150		
		CT1016-W		100	-	300		
		CT1017-W		80	-	160		
		CT1018-W		130	-	260		
		CT1019-W		200	-	400		
$V_{CE(SAT)}$	Collector-Emitter Saturation Voltage		I_F= 10mA, I_C= 1mA	-	-	0.4	V	
R_{IO}	Isolation Resistance		V_{IO}= 500V_{DC}	$5x10^{10}$	-	-	Ω	
C_{IO}	Isolation Capacitance		f= 1MHz	-	-	1	pF	

Switching Characteristics

Symbol	*Parameters*	*Test Conditions*	*Min*	*Typ*	*Max*	*Units*	*Notes*
T_{ON}	Turn On Time	I_C= 5mA, V_{CE}= 5V, R_L= 100Ω	-	4.8	22	µs	
T_{OFF}	Turn Off Time		-	4.2	22		
t_r	Rise Time		-	2.7	18		
t_f	Fall Time		-	4	18		

© 2022 CT MICRO INTERNATIONAL CORPORATION
ALL RIGHTS RESERVED.

Typical Characteristic Curves *T_A = 25°C, unless otherwise specified*

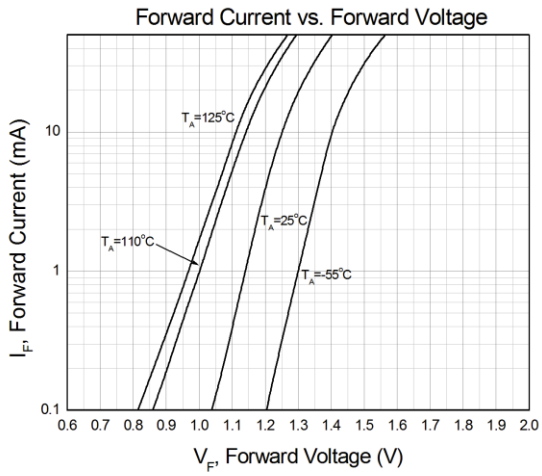

Figure 1

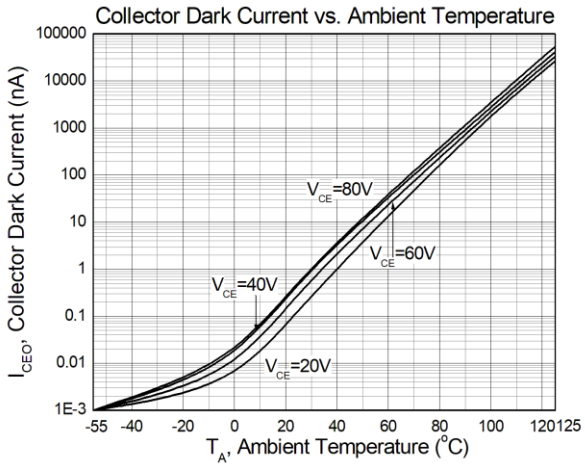

Figure 2

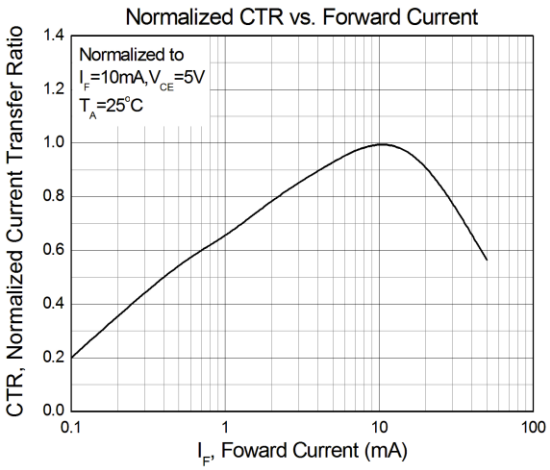

Figure 3

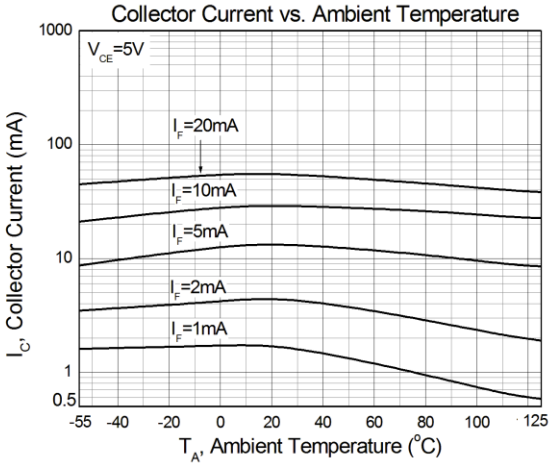

Figure 4

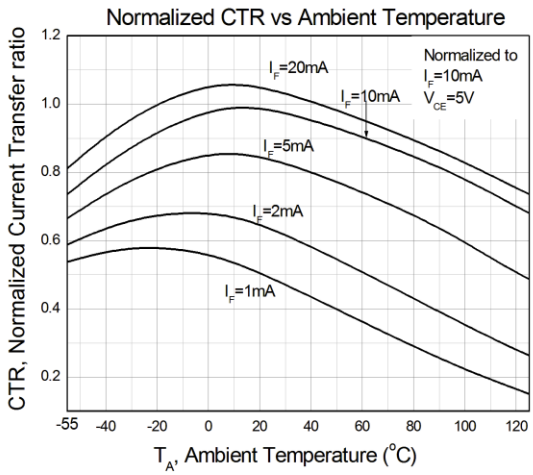

Figure 5

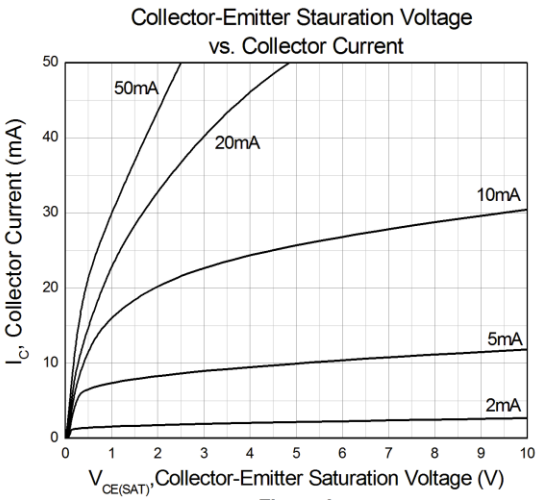

Figure 6

© 2022 CT MICRO INTERNATIONAL CORPORATION
ALL RIGHTS RESERVED.

Typical Characteristic Curves *T_A = 25°C, unless otherwise specified (Continued)*

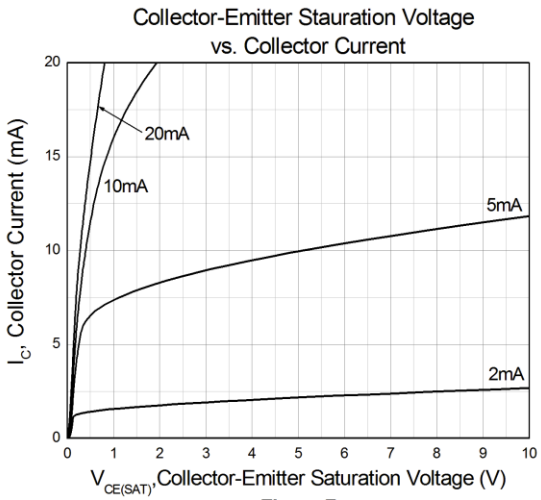

Figure 7

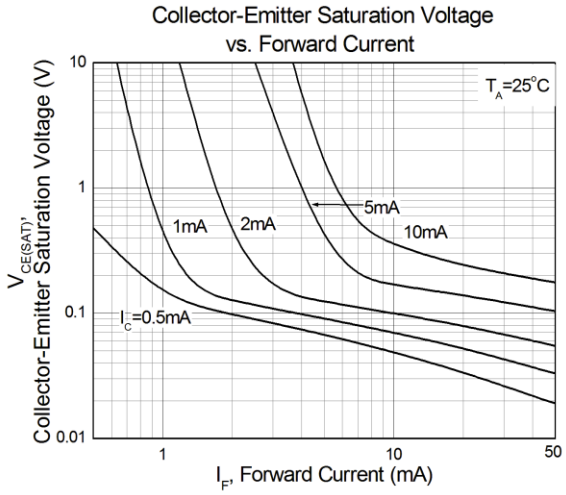

Figure 8

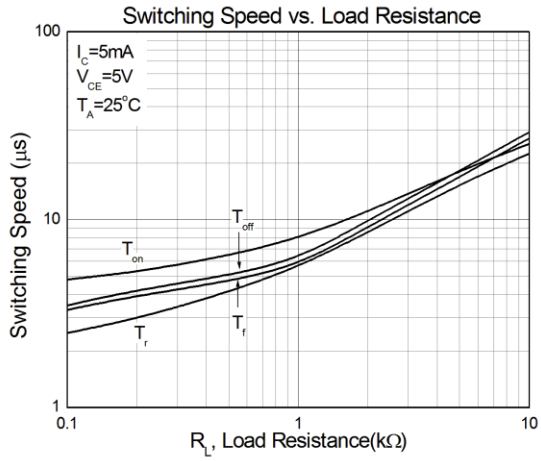

Figure 9

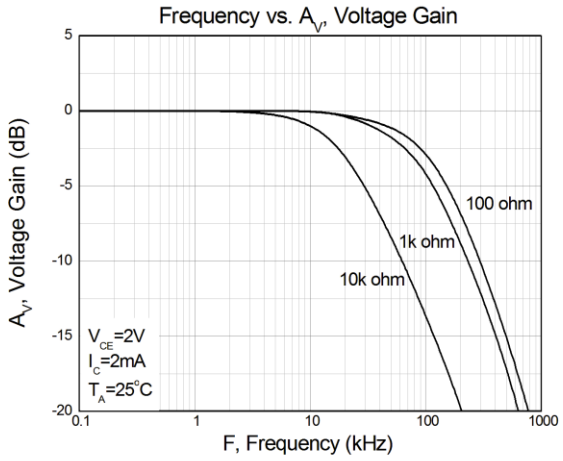

Figure 10

© 2022 CT MICRO INTERNATIONAL CORPORATION
ALL RIGHTS RESERVED.

Test Circuit

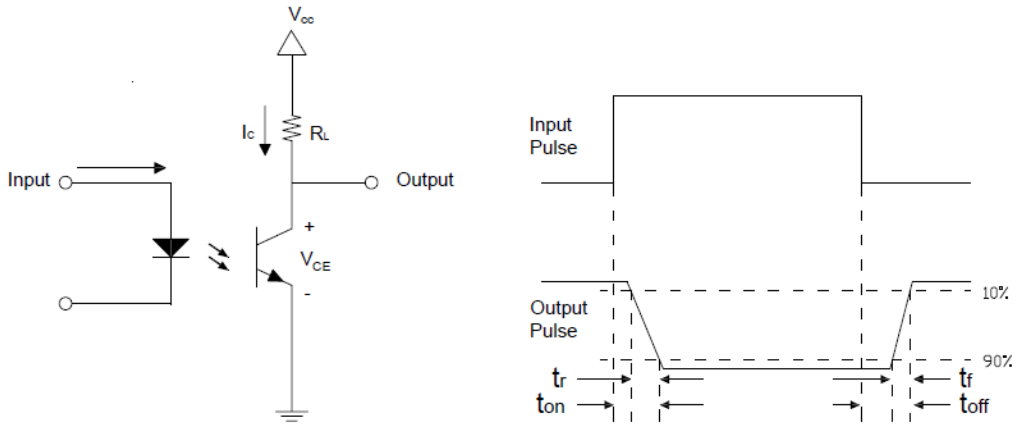

Figure 11: Switching Time Test Circuits

© 2022 CT MICRO INTERNATIONAL CORPORATION
ALL RIGHTS RESERVED.

Package Dimension *Dimensions in mm unless otherwise stated*

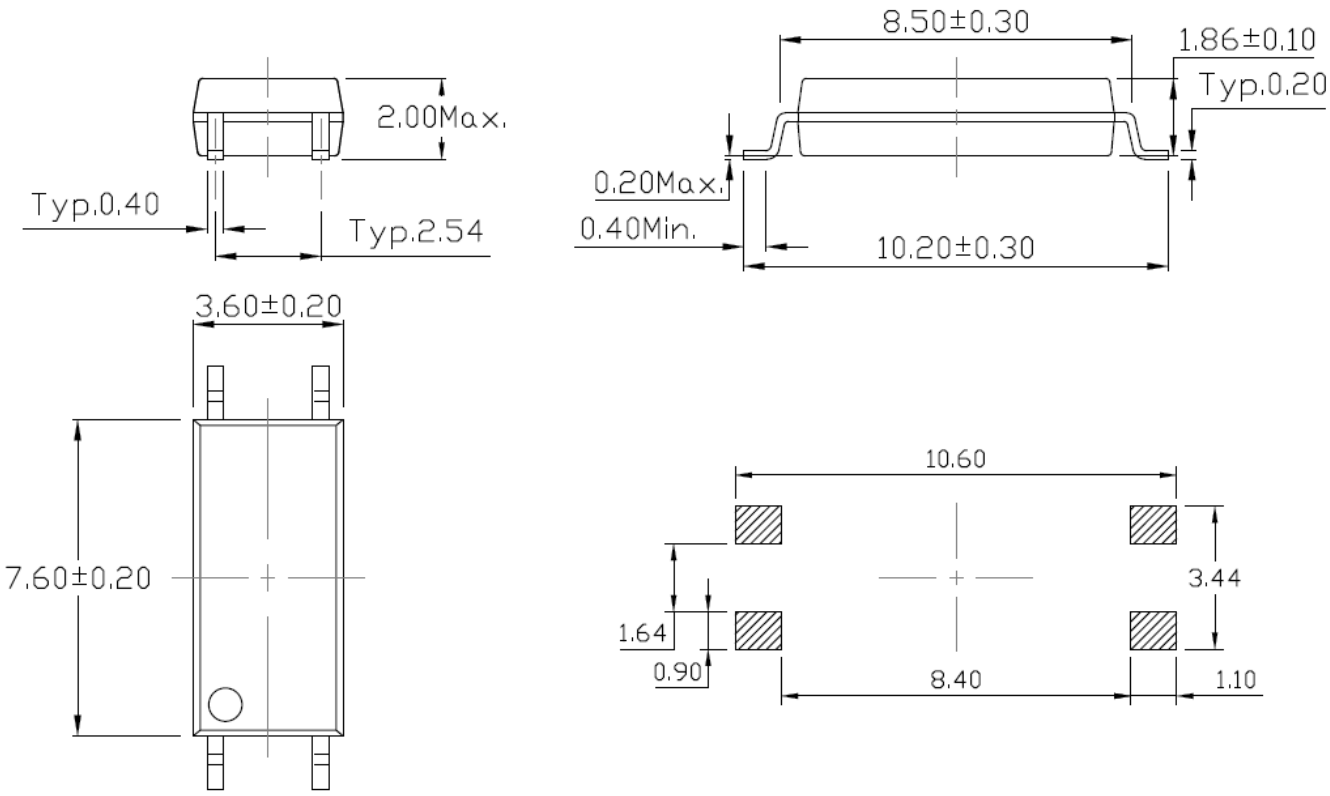

Marking Information

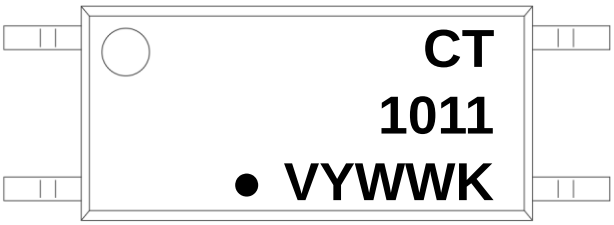

Note:

CT	: Denotes “CT Micro”
1011	: Part Number
V	: VDE Safety Mark Option (Blank or V)
Y	: One Digit Year Code
WW	: Two Digit Work Week
K	: Manufacturing Code
●	: Lead Frame Material Option (Blank：Copper ; ●：Iron)

© 2022 CT MICRO INTERNATIONAL CORPORATION
ALL RIGHTS RESERVED.

Ordering Information

CT101X (V)(Z) -W-H

CT	= Denotes “CT Micro”
101X	= Part Numbers (X= 0,1,2,3,4,5,6,7,8,9)
V	= VDE Safety Mark Option (Blank or V)
Z	= Tape and Reel Option (Blank, T1 or T2)
W	= Outline Color (W, White)
H	= Lead frame option (H: Iron, None: Copper)

Option	*Description*	*Quantity*
T1	Surface Mount Lead Forming – With Option 1 Taping	3000Units/Reel
T2	Surface Mount Lead Forming – With Option 2 Taping	3000Units/Reel

Reel Dimension *All dimensions are in mm, unless otherwise stated*

Option T1/T2

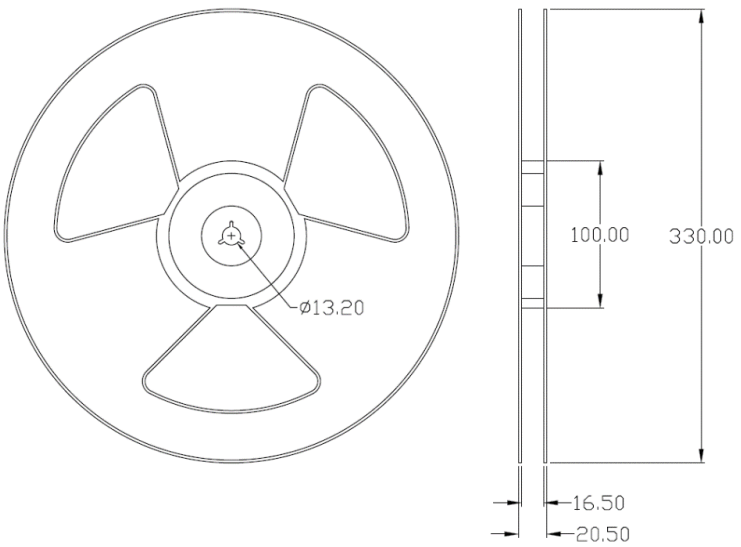

© 2022 CT MICRO INTERNATIONAL CORPORATION
ALL RIGHTS RESERVED.

Carrier Tape Specifications *Dimensions in mm unless otherwise stated*

Option T1

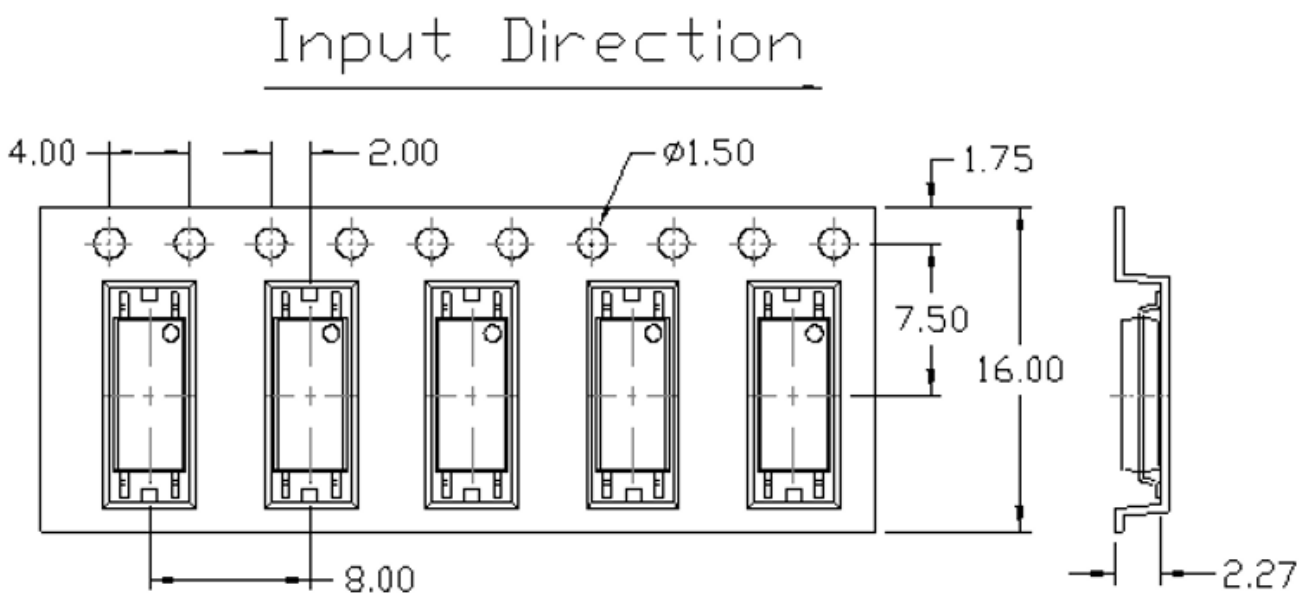

Option T2

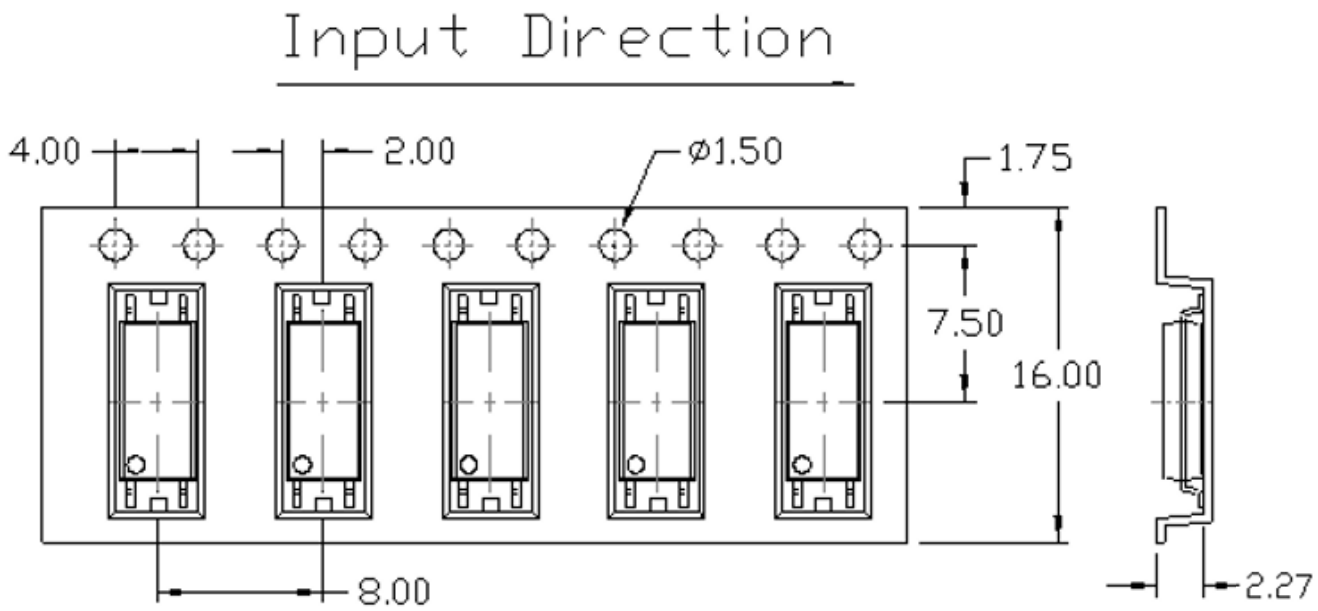

© 2022 CT MICRO INTERNATIONAL CORPORATION
ALL RIGHTS RESERVED.

Solderability spec (follow the JEDEC standard JESD22-B102)

Reflow Soldering: Immersed surface, other than the end of pin as cut-surface, must be covered by solder.
Solder-Bath: More than 95% of the electrode must be covered with solder.

Wave soldering (follow the JEDEC standard JESD22-A111)

One time soldering is recommended within the condition of temperature.
Temperature: 260+0/-5˚C.
Time: 10 sec.
Preheat temperature:25 to 140˚C.
Preheat time: 30 to 80 sec.

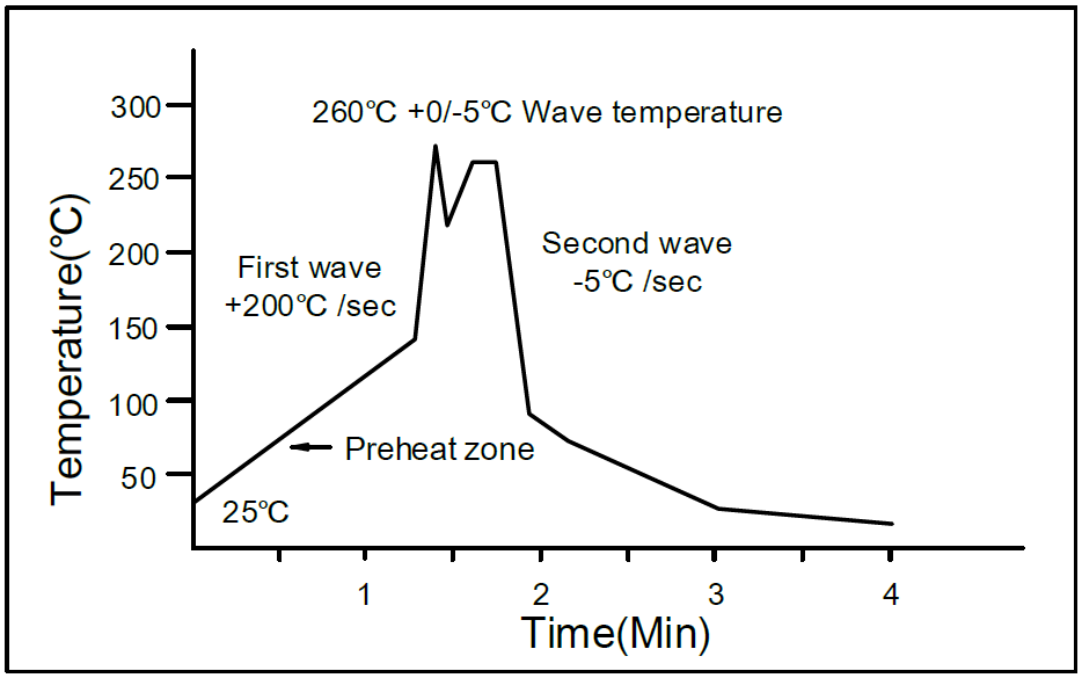

Iron soldering (follow the standard MIL-STD 202G, Method 210F)

Allow single lead soldering in every single process.
One time soldering is recommended. Temperature: 350+±10˚C
Time: 5 sec max.

© 2022 CT MICRO INTERNATIONAL CORPORATION
ALL RIGHTS RESERVED.

Reflow Profile (follow the JEDEC standard J-STD-020)

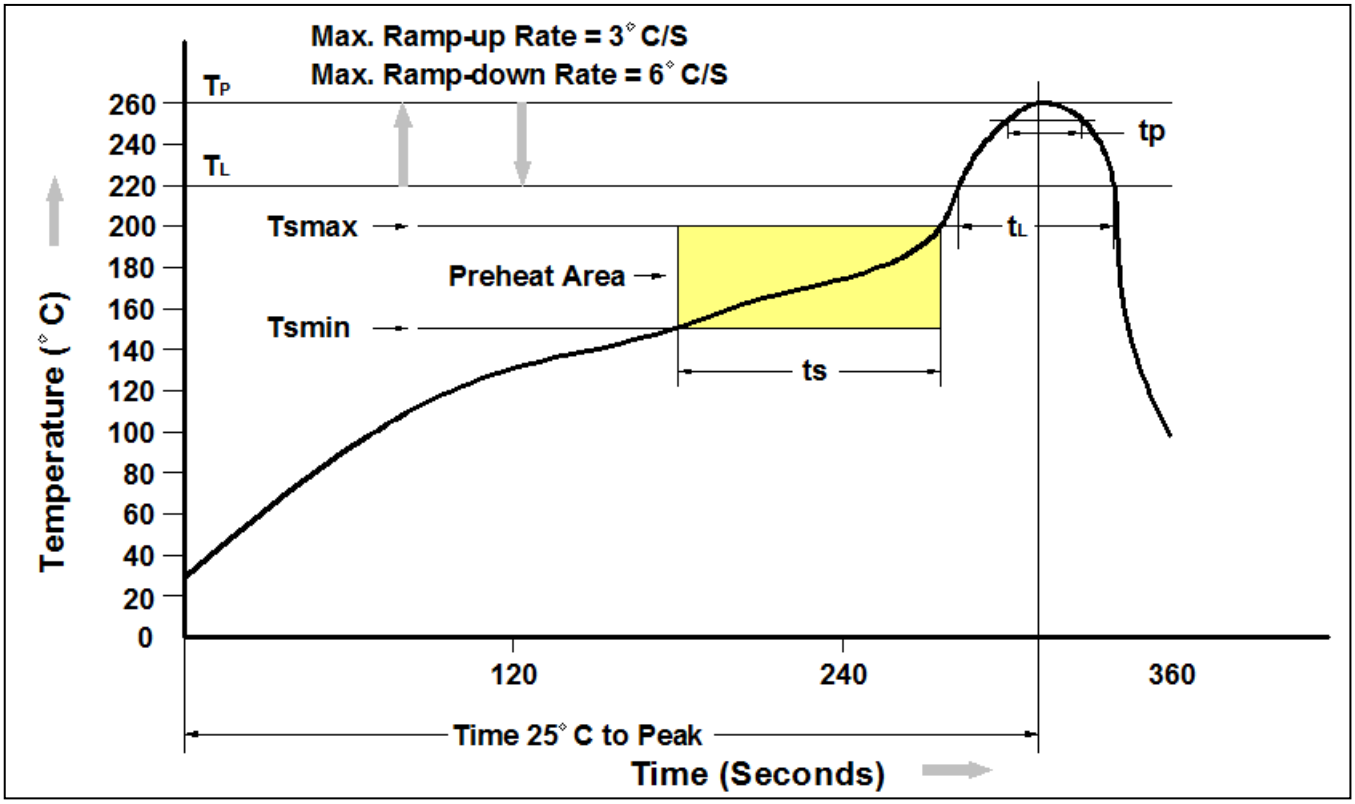

Profile Feature	Pb-Free Assembly Profile
Temperature Min. (Tsmin)	150°C
Temperature Max. (Tsmax)	200°C
Time (ts) from (Tsmin to Tsmax)	60-120 seconds
Ramp-up Rate (t_L to t_P)	3°C/second max.
Liquidous Temperature (T_L)	217°C
Time (t_L) Maintained Above (T_L)	60 – 150 seconds
Peak Body Package Temperature	260°C +0°C / -5°C
Time (t_P) within 5°C of 260°C	30 seconds
Ramp-down Rate (T_P to T_L)	6°C/second max
Time 25°C to Peak Temperature	8 minutes max.

© 2022 CT MICRO INTERNATIONAL CORPORATION
ALL RIGHTS RESERVED.

DISCLAIMER

DMC-Isolator® IS A TRADEMARK OF CT MICRO INTERNATIONAL CORPORATION AND/OR ITS SUBSIDIARIES. CT MICRO OWNS THE RIGHTS TO A NUMBER OF PATENTS, TRADEMARKS, COPYRIGHTS AND OTHER INTELLECTUAL PROPERTY.

CT MICRO RESERVES THE RIGHT TO MAKE CHANGES WITHOUT FURTHER NOTICE TO ANY PRODUCTS HEREIN TO IMPROVE RELIABILITY, FUNCTION OR DESIGN. CT MICRO DOES NOT ASSUME ANY LIABILITY ARISING OUT OF THE APPLICATION OR USE OF ANY PRODUCT OR CIRCUIT DESCRIBED HEREIN; NEITHER DOES IT CONVEY ANY LICENSE UNDER ITS PATENT RIGHTS, NOR THE RIGHTS OF OTHERS.

DISCOLORATION MIGHT OCCUR ON THE PACKAGE SURFACE AFTER SOLDERING, REFLOW OR LONG TERM USE. THIS DOES NOT IMPACT THE PRODUCT PERFORMANCE NOR THE PRODUCT RELIABILITY.

CT MICRO ARE NOT AUTHORIZED FOR USE AS CRITICAL COMPONENTS IN LIFE SUPPORT DEVICES OR SYSTEMS WITHOUT EXPRESS WRITTEN APPROVAL OF CT MICRO INTERNATIONAL CORPORATION.

1. *Life support devices or systems are devices or systems which, (a) are intended for surgical implant into the body, or (b) support or sustain life, or (c) whose failure to perform when properly used in accordance with instruction for use provided in the labelling, can be reasonably expected to result in significant injury to the user.*
2. *A critical component is any component of a life support device or system whose failure to perform can be reasonably expected to cause the failure of the life support device or system, or to affect its safety or effectiveness.*

© 2022 CT MICRO INTERNATIONAL CORPORATION
ALL RIGHTS RESERVED.