CT Micro

4N2X, 4N3X, H11AX

6Pin Photo Transistor Coupler

Features

- High isolation 5000 VRMS
- CTR flexibility available see order information
- DC input with transistor output
- Temperature range - 55 °C to 110 °C

Applications

- Switch mode power supplies
- Computer peripheral interface
- Microprocessor system interface

Description

The 4N2X, 4N3X and H11AX series consists of a phototransistor optically coupled to a gallium arsenide Infrared-emitting diode in a 6-lead DIP package with bending options.

Package Outline

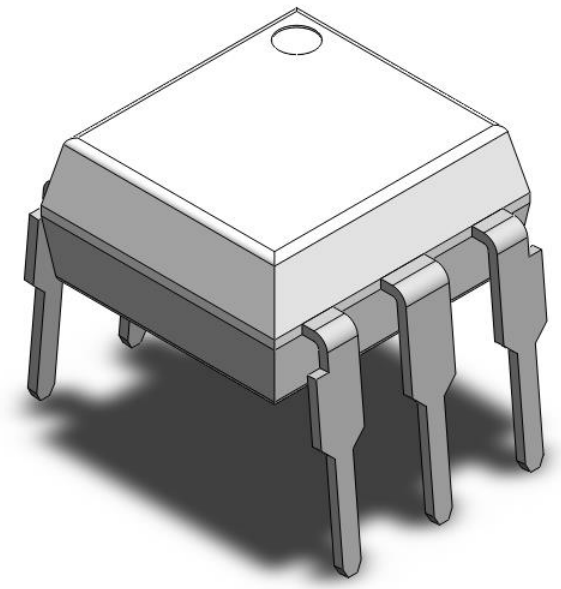

Note: Different bending options available. See package dimension.

Schematic

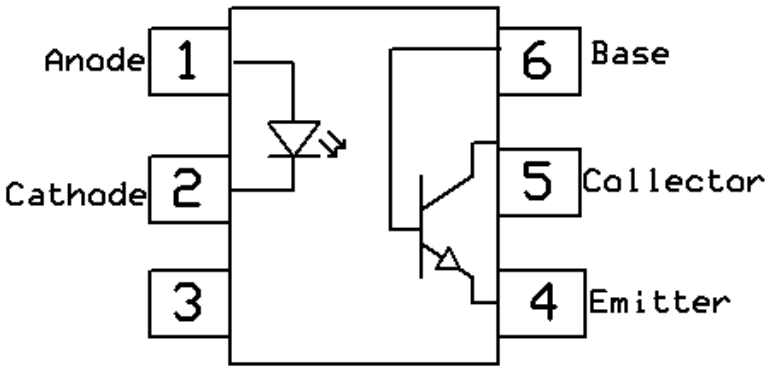

Absolute Maximum Rating at 25°C

Symbol	*Parameters*	*Ratings*	*Units*	*Notes*
V_{ISO}	Isolation voltage	5000	V_{RMS}	
T_{OPR}	Operating temperature	-55 ~ +110	°C	
T_{STG}	Storage temperature	-55 ~ +125	°C	
T_{SOL}	Soldering temperature	260	°C	
Emitter				
I_F	Forward current	60	mA	
$I_{F(TRANS)}$	Peak transient current (≤1μs P.W,300pps)	1	A	
V_R	Reverse voltage	6	V	
P_D	Power dissipation	100	mW	
Detector				
P_D	Power dissipation	150	mW	
B_{VCEO}	Collector-Emitter Breakdown Voltage	80	V	
B_{VCBO}	Collector-Base Breakdown Voltage	80	V	
B_{VECO}	Emitter-Collector Breakdown Voltage	7	V	
B_{VEBO}	Emitter-Base Breakdown Voltage	7	V	

Electrical Characteristics *T_A = 25°C (unless otherwise specified)*

Emitter Characteristics

Symbol	Parameters	Test Conditions	Min	Typ	Max	Units	Notes
V_F	Forward voltage	I_F=10mA		1.2	1.4	V	
I_R	Reverse Current	V_R = 6V	-	-	5	µA	
C_{IN}	Input Capacitance	f= 1kHz	-	45	-	pF	

Detector Characteristics

Symbol	Parameters		Test Conditions	Min	Typ	Max	Units	Notes
B_{VCEO}	Collector-Emitter Breakdown		I_C= 100µA	80	-	-	V	
B_{VECO}	Emitter-Collector Breakdown		I_E= 1mA	7	-	-	V	
B_{VCBO}	Collector-Base Breakdown		I_C= 100µA	80	-	-	V	
B_{VEBO}	Emitter-Base Breakdown		I_E= 100µA	7	-	-	V	
I_{CEO}	Collector-Emitter Dark Current	4N2X, H11AX	V_{CE}= 10V, I_F=0mA	-	-	45	nA	
		4N3X	V_{CE}=60V, I_F=0mA	-	-	45	nA	
I_{CBO}	Collector-Base Dark Current		V_{CB}= 10V, I_F=0mA	-	-	20	nA	

Transfer Characteristics

Symbol	Parameters		Test Conditions	Min	Typ	Max	Units	Notes
CTR	Current Transfer Ratio	4N35, 4N36, 4N37	I_F= 10mA, V_{CE}= 10V	100	-	-	%	
		4N25,4N26, 4N38, H11A2, H11A3		20	-	-		
		4N27, 4N28, H11A4		10	-	-		
		H11A1		50	-	-		
		H11A5		30	-	-		
$V_{CE(SAT)}$	Collector-Emitter Saturation Voltage	4N2X	I_F= 50mA, I_C= 2mA	-	-	0.5	V	
		4N35,4N36,4N37	I_F= 10mA, I_C= 0.5mA	-	-	0.3		
		H11AX		-	-	0.4		
		4N38	I_F= 20mA, I_C= 4mA	-	-	1.0		
R_{IO}	Isolation Resistance		V_{IO}= 500V_{DC}	$1x10^{11}$			Ω	
C_{IO}	Isolation Capacitance		f= 1Mhz		0.25		pF	

Switching Characteristics

Symbol	*Parameters*		*Test Conditions*	*Min*	*Typ*	*Max*	*Units*	*Notes*
T_{ON}	Turn On Time	4N2X, H11AX	I_F= 10mA, V_{CE}= 10V, R_L= 100Ω	-	2.6	9.8	µs	
		4N3X	I_c= 2mA, V_{CE}= 10V, R_L= 100Ω	-	9.5	11.5		
T_{OFF}	Turn Off Time	4N2X, H11AX	I_F= 10mA, V_{CE}= 10V, R_L= 100Ω	-	2.6	9.8	µs	
		4N3X	I_c= 2mA, V_{CE}= 10V, R_L= 100Ω	-	9.5	11.5		

Typical Characteristic Curves

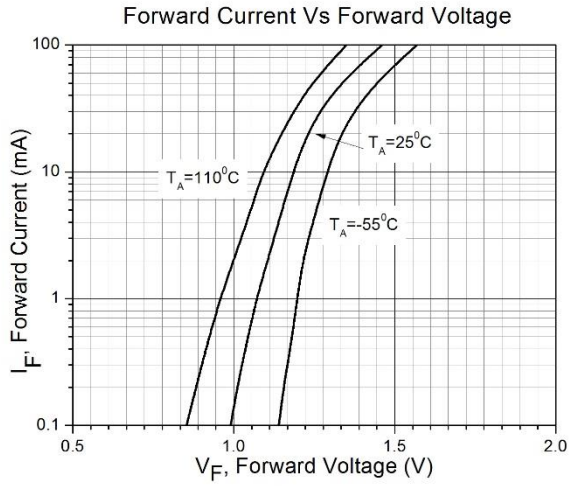

Figure 1

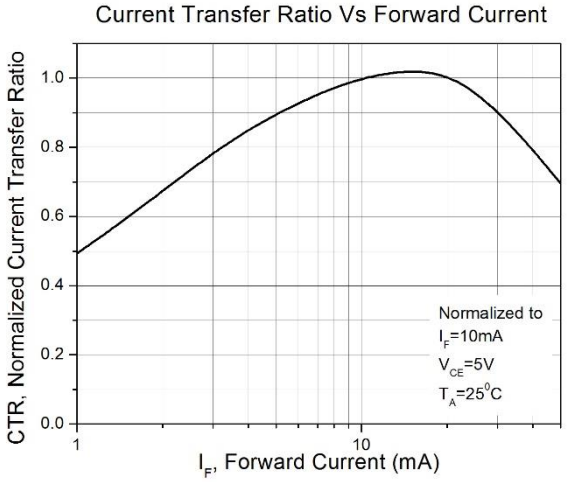

Figure 2

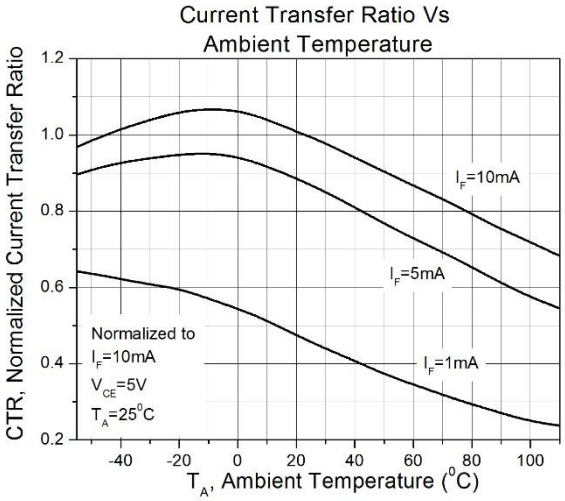

Figure 3

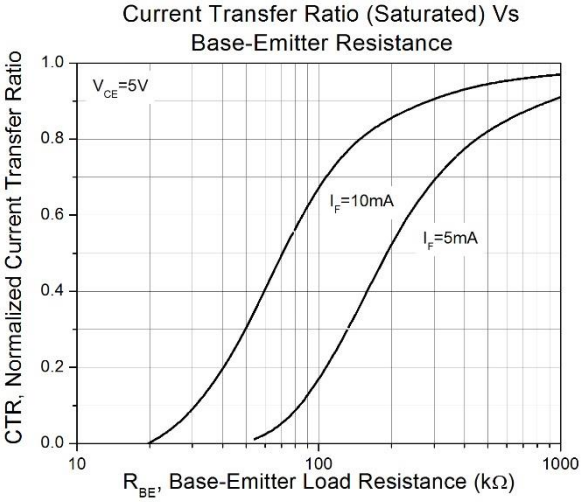

Figure 4

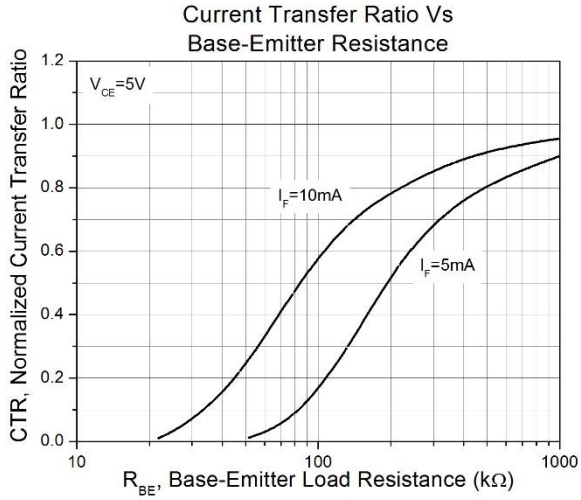

Figure 5

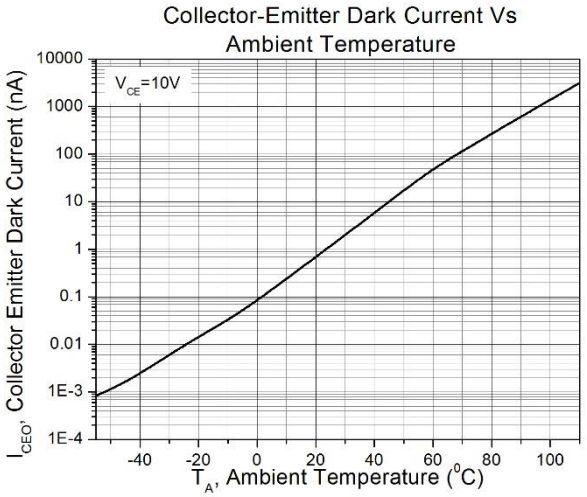

Figure 6

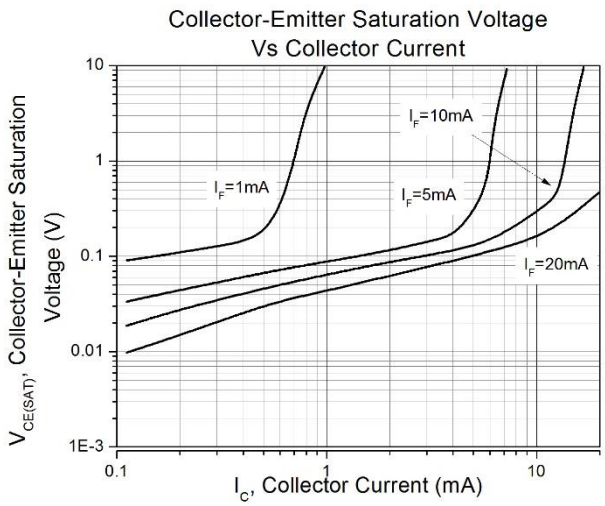

Figure 7

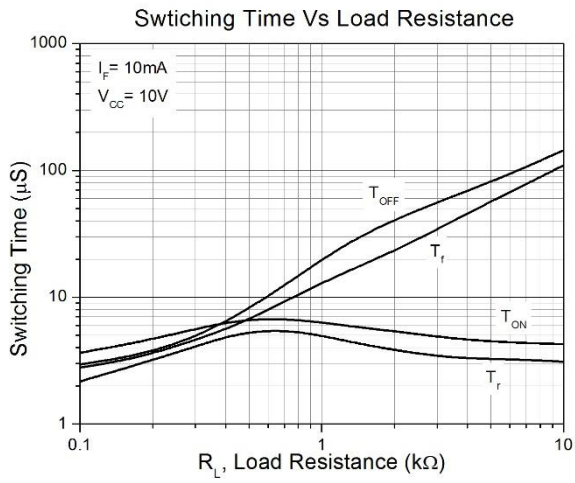

Figure 8

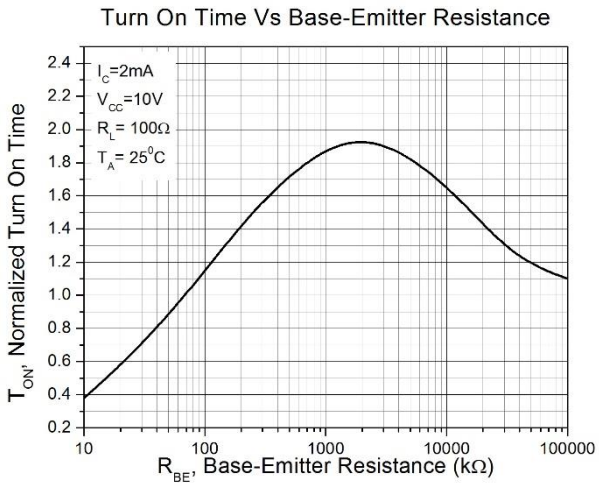

Figure 9

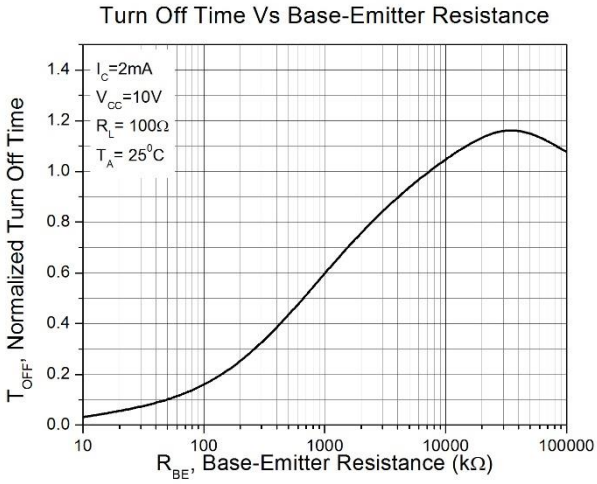

Figure 10

Package Dimension *Dimensions in mm unless otherwise stated*

Standard DIP – Through Hole

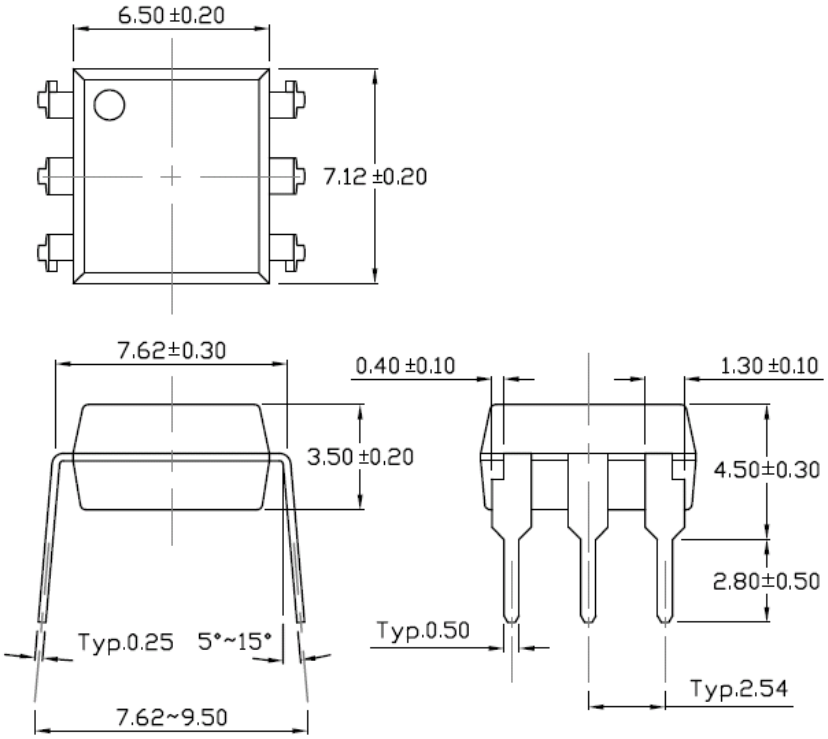

Wide Lead Forming – Through Hole

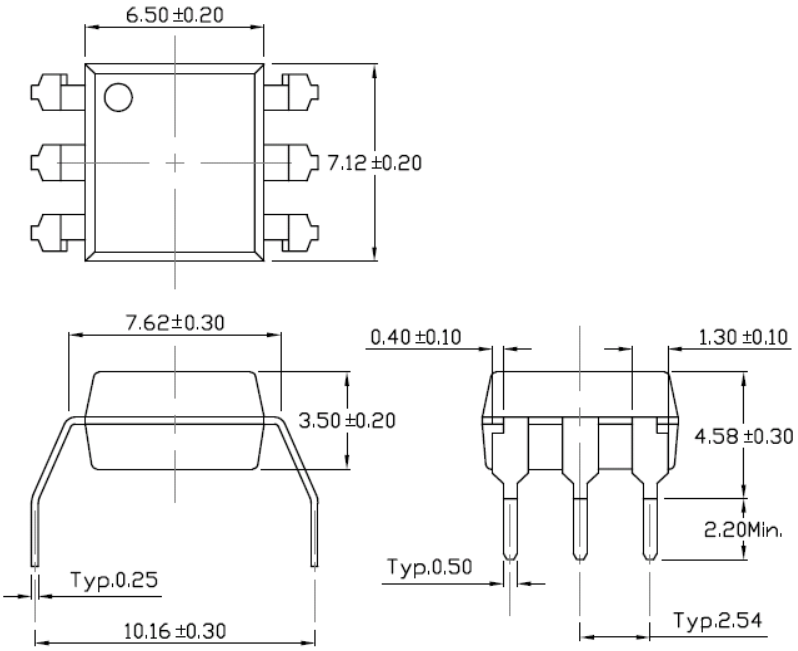

Surface Mount Forming

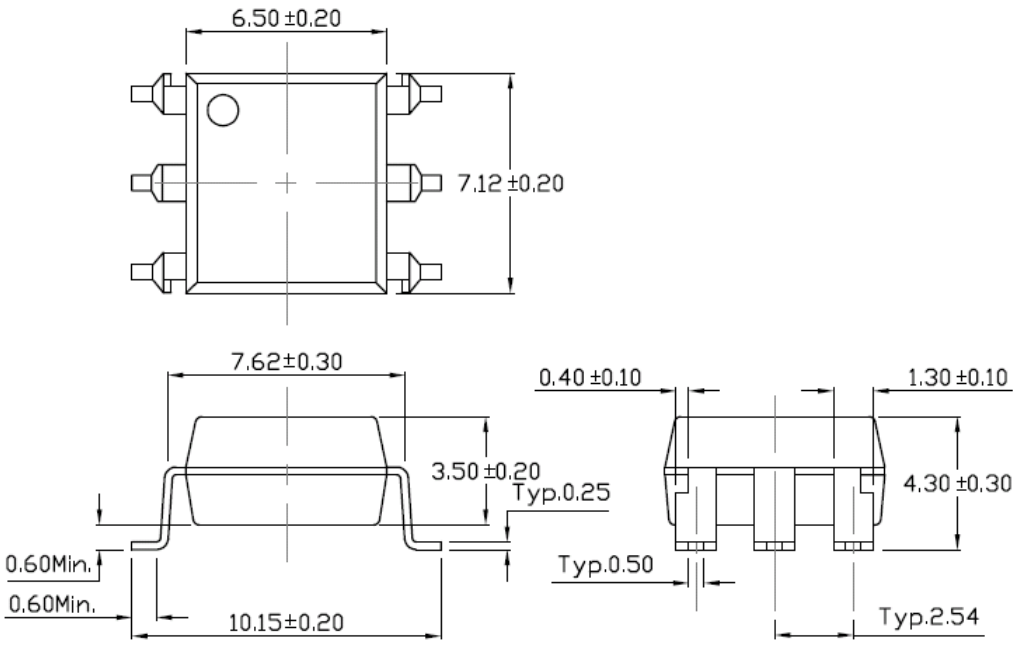

Surface Mount Forming (Low Profile)

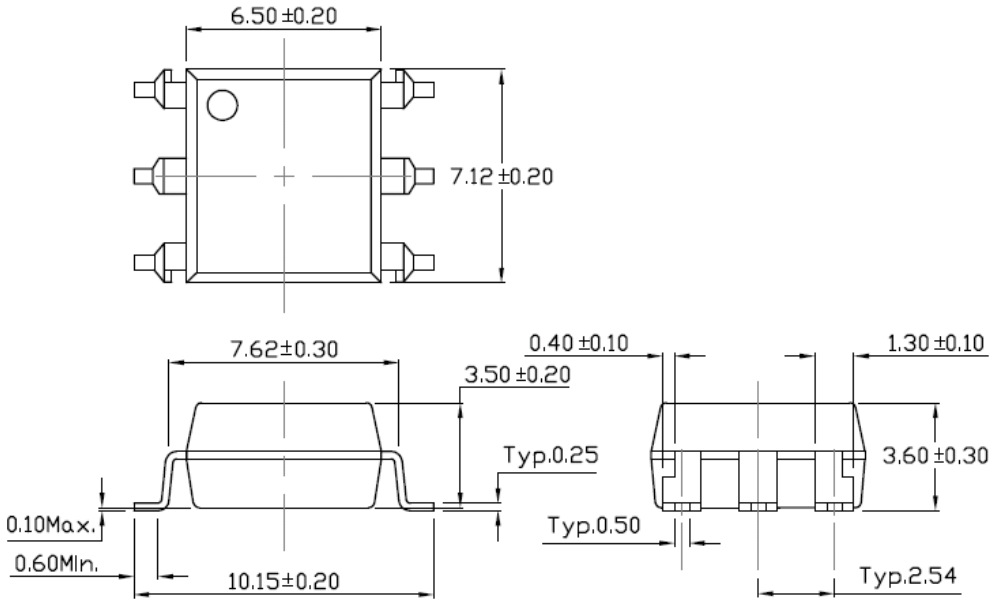

Recommended Solder Mask *Dimensions in mm unless otherwise stated*

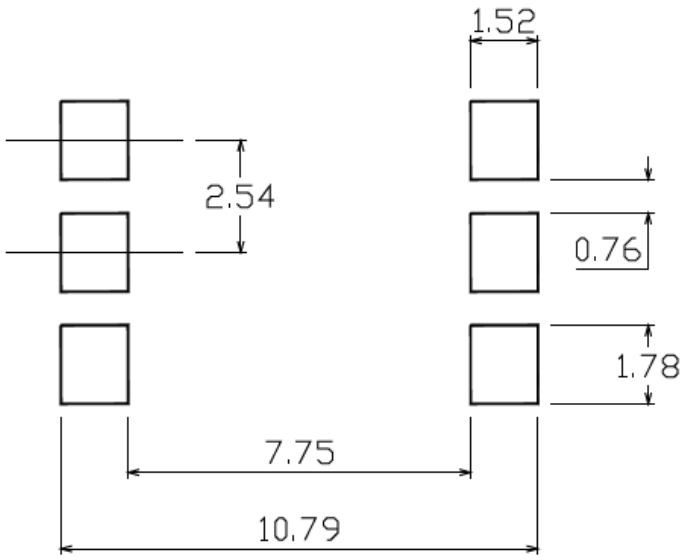

Marking Information

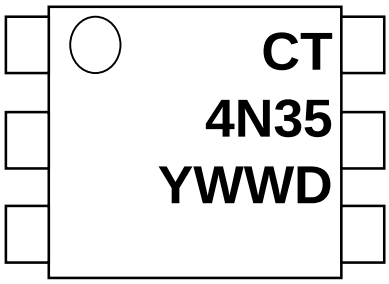

Note:

CT	: Logo
4N35	: Product Number
Y	: Fiscal Year
WW	: Work Week
D	: Production Code

Ordering Information

4N2X(Y)(Z)-G, 4N3XY(Z)-G, H11AXY(Z)-G

X = (5,6,7,8 for 4N2X & 4N3X series), (1,2,3,4,5 for H11AX series)

Y = Lead form option (S, SL, M or none)

Z = Tape and reel option (TA, TB or none)

G= Material option (G: Green, None: Non-green)

Option	***Description***	***Quantity***
None	Standard 6 Pin Dip	50Units/Tube
M	Wide Lead Forming	50Units/Tube
S(TA)	Surface Mount Lead Forming – With Option A Taping	1000 Units/Reel
S(TB)	Surface Mount Lead Forming – With Option B Taping	1000 Units/Reel
SL(TA)	Surface Mount Lead Forming(Low Profile) – With Option A Taping	1000 Units/Reel
SL(TB)	Surface Mount Lead Forming(Low Profile) – With Option B Taping	1000 Units/Reel

Reflow Profile

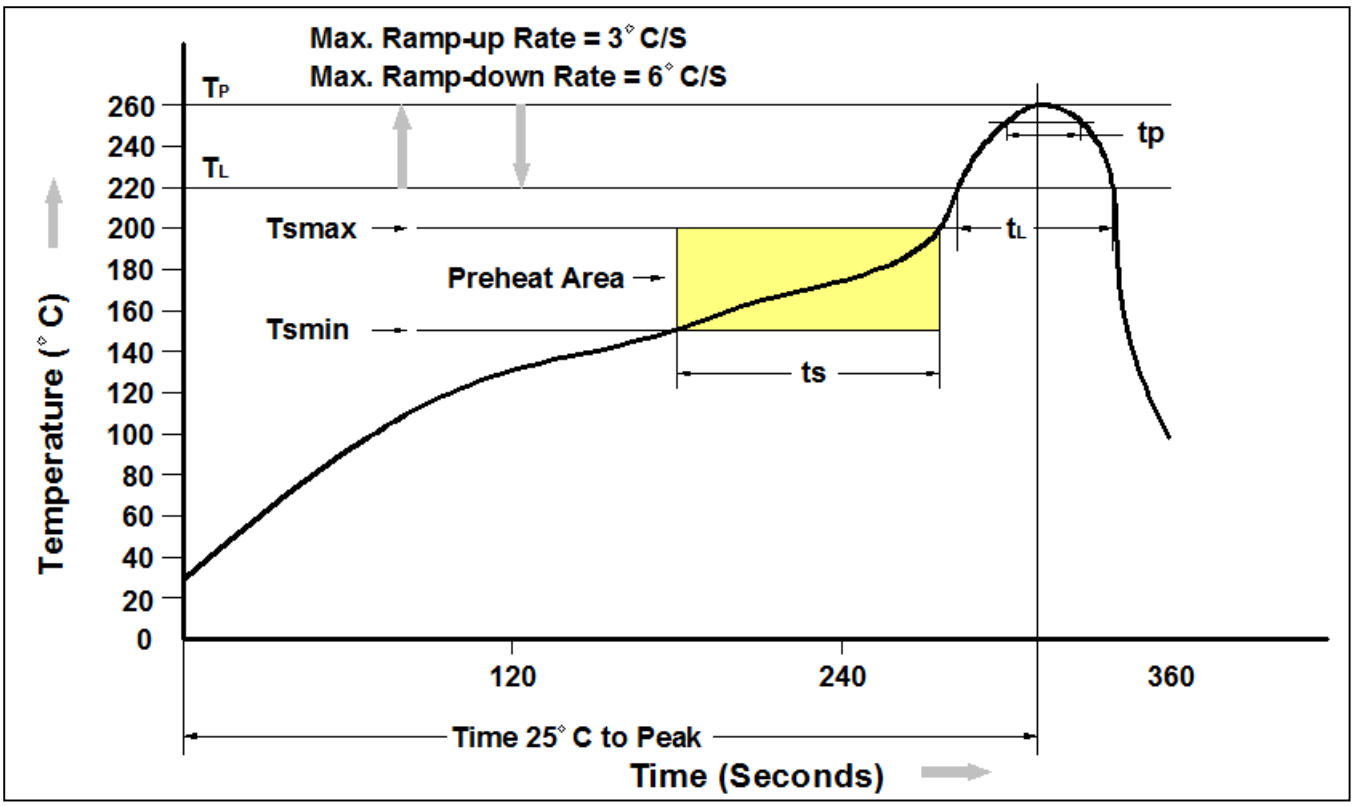

Profile Feature	Pb-Free Assembly Profile
Temperature Min. (Tsmin)	150°C
Temperature Max. (Tsmax)	200°C
Time (ts) from (Tsmin to Tsmax)	60-120 seconds
Ramp-up Rate (t_L to t_P)	3°C/second max.
Liquidous Temperature (T_L)	217°C
Time (t_L) Maintained Above (T_L)	60 – 150 seconds
Peak Body Package Temperature	260°C +0°C / -5°C
Time (t_P) within 5°C of 260°C	30 seconds
Ramp-down Rate (T_P to T_L)	6°C/second max
Time 25°C to Peak Temperature	8 minutes max.

DISCLAIMER

CT MICRO RESERVES THE RIGHT TO MAKE CHANGES WITHOUT FURTHER NOTICE TO ANY PRODUCTS HEREIN TO IMPROVE RELIABILITY, FUNCTION OR DESIGN. CT MICRO DOES NOT ASSUME ANY LIABILITY ARISING OUT OF THE APPLICATION OR USE OF ANY PRODUCT OR CIRCUIT DESCRIBED HEREIN; NEITHER DOES IT CONVEY ANY LICENSE UNDER ITS PATENT RIGHTS, NOR THE RIGHTS OF OTHERS.

DISCOLORATION MIGHT OCCUR ON THE PACKAGE SURFACE AFTER SOLDERING, REFLOW OR LONG TERM USE. THIS DOES NOT IMPACT THE PRODUCT PERFORMANCE NOR THE PRODUCT RELIABILITY.

CT MICRO ARE NOT AUTHORIZED FOR USE AS CRITICAL COMPONENTS IN LIFE SUPPORT DEVICES OR SYSTEMS WITHOUT EXPRESS WRITTEN APPROVAL OF CT MICRO INTERNATIONAL CORPORATION.

1. *Life support devices or systems are devices or systems which, (a) are intended for surgical implant into the body, or (b) support or sustain life, or (c) whose failure to perform when properly used in accordance with instruction for use provided in the labelling, can be reasonably expected to result in significant injury to the user.*
2. *A critical component is any component of a life support device or system whose failure to perform can be reasonably expected to cause the failure of the life support device or system, or to affect its safety or effectiveness.*